FURUNO

OPERATOR'S MANUAL

NAVTEX RECEIVER

Model **NX-900**

FURUNO ELECTRIC CO., LTD.

www.furuno.com

FURUNO ELECTRIC CO., LTD.

9-52 Ashihara-cho,
Nishinomiya, 662-8580, JAPAN

・FURUNO Authorized Distributor/Dealer

All rights reserved.

Printed in Japan

A : NOV. 2023
C1 : NOV. 29, 2024

Pub. No. OME-57150-C1

(TAYA) NX-900

0001999 7913

IMPORTANT NOTICES

General

- This manual has been authored with simplified grammar, to meet the needs of international users.
- The operator of this equipment must read and follow the descriptions in this manual. Wrong operation or maintenance can void the warranty or cause injury.
- Do not copy any part of this manual without written permission from FURUNO.
- If this manual is lost or worn, contact your dealer about replacement.
- The contents of this manual and equipment specifications can change without notice.
- The example screens (or illustrations) shown in this manual can be different from the screens you see on your display. The screens you see depend on your system configuration and equipment settings.
- Save this manual for future reference.
- Any modification of the equipment (including software) by persons not authorized by FURUNO will void the warranty.
- The content of the warranty depends on the individual purchase agreement.
- The following concern acts as our importer in Europe, as defined in DECISION No 768/2008/EC.
  - Name: FURUNO EUROPE B.V.
  - Address: Siriusstraat 86, 5015 BT, Tilburg, The Netherlands
- The following concern acts as our importer in UK, as defined in SI 2016/1025 as amended SI 2019/470.
  - Name: FURUNO (UK) LTD.
  - Address: West Building Penner Road Havant Hampshire PO9 1QY, U.K.
- All brand and product names, trademarks, registered trademarks, and service marks belong to their respective holders.

How to discard this product

Discard this product according to local regulations for the disposal of industrial waste. For disposal in the USA, see the homepage of the Electronics Industries Alliance (http://www.eiae.org/) for the correct method of disposal.

How to discard a used battery

Some FURUNO products have a battery(ies). To see if your product has a battery, see the chapter on Maintenance. If a battery is used, tape + and - terminals of the battery before disposal to prevent fire, heat generation caused by short circuit.

In the European Union

The crossed-out trash can symbol indicates that all types of batteries must not be discarded in standard trash, or at a trash site. Take the used batteries to a battery collection site according to your national legislation and the Batteries Directive 2006/66/EU.

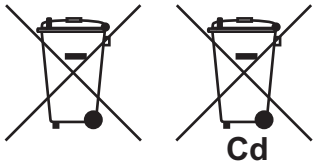

In the USA

The Mobius loop symbol (three chasing arrows) indicates that Ni-Cd and lead-acid rechargeable batteries must be recycled. Take the used batteries to a battery collection site according to local laws.

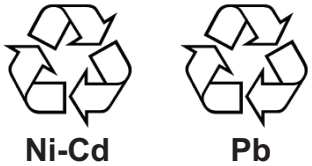

In the other countries

There are no international standards for the battery recycle symbol. The number of symbols can increase when the other countries make their own recycle symbols in the future.

SAFETY INSTRUCTIONS

Follow the safety instructions listed below and throughout this manual to prevent damage to your equipment or vessel and to prevent harm to the operator or other personnel on-board. The results of failing to follow the instructions and guidelines outlined herein are listed below.

WARNING	Indicates a condition that can cause death or serious injury if not avoided.
CAUTION	Indicates a condition that can cause minor or moderate injury if not avoided.

Warning, Caution Prohibitive Action Mandatory Action

Safety Instructions for the Operator

WARNING

ELECTRICAL SHOCK HAZARD
Do not open the equipment.

Only qualified personnel should work inside the equipment.

Do not disassemble or modify the equipment.

Fire, electrical shock or serious injury can result.

Immediately turn off the power at the switchboard if the equipment is emitting smoke or fire.

Continued use of the equipment can cause fire or electrical shock. Contact a FURUNO agent for service.

CAUTION

Keep heater away from equipment.

A heater can melt the equipment's power cord, which can cause fire or electrical shock.

Use the proper fuse.

Fuse rating is shown on the equipment. Use of a wrong fuse can result in damage to the equipment.

Do not operate the equipment with wet hands.

Electrical shock can result.

About the TFT LCD

The TFT LCD is constructed using the latest LCD techniques, and displays 99.99% of its pixels. The remaining 0.01% of the pixels may drop out or blink, however this is not an indication of malfunction.

Safety Instructions for the Installer

⚠ WARNING

Do not open the cover unless totally familiar with electrical circuits and service manual.

Improper handling can result in electrical shock.

Turn off the power at the ship's mains switchboard before beginning the installation. Post a warning sign near the switchboard to ensure that the power will not be applied while the equipment is being installed.

Serious injury or death can result if the power is not turned off, or is applied while the equipment is being installed.

⚠ CAUTION

Ground the equipment to prevent mutual interference.

Confirm that the power supply voltage is compatible with the voltage rating of the equipment.

Connection to the wrong power supply can cause fire or equipment damage. The voltage rating appears on the label at the rear of the equipment.

Observe the following compass safe distances to prevent interference to a magnetic compass:

Unit	Standard compass	Steering compass
NX-900	0.55 m	0.35 m
PP-900	0.30 m	0.30 m
IF-900	0.70 m	0.40 m
NX-9HE	0.40 m	0.30 m
PR-241	0.85 m	0.55 m

TABLE OF CONTENTS

FOREWORD ..... **vi**
SYSTEM CONFIGURATION ..... **vii**
EQUIPMENT LISTS ..... **viii**

1. PRINCIPLE OF NAVTEX SYSTEM **1-1**
1.1 How NAVTEX Works 1-1
1.2 NAVTEX System Operation 1-1
1.3 Message Format 1-1
1.4 NAVTEX Station Map 1-3
1.5 NAVTEX Station List 1-4

2. OPERATION **2-1**
2.1 Operating Controls 2-1
2.2 How to Turn the Power On/Off 2-2
2.3 Status Bar (Header) Icons 2-3
2.4 How to Adjust the Display Brilliance/Panel Dimmer 2-4
2.4.1 How to adjust display brilliance/panel dimmer 2-4
2.4.2 Display/panel dimmer preset 2-4
2.5 Messages 2-5
2.5.1 How to receive a message 2-5
2.5.2 How to open the message 2-5
2.5.3 How to select message category to display 2-6
2.5.4 How to lock and unlock a message 2-6
2.5.5 How to print messages 2-7
2.6 Alerts 2-8
2.6.1 Alert indication 2-8
2.6.2 Alert list 2-8
2.6.3 Alert acknowledgment/resolution 2-9
2.7 Receive Mode Settings 2-10
2.8 Station and Message Settings 2-11
2.9 Frequency Settings 2-12
2.9.1 How to select the local frequency 2-12
2.9.2 How to switch the frequency on the display 2-12
2.10 How to Edit the Station List 2-13
2.11 [System] Menu 2-15
2.12 [Display] Menu 2-16

3. MAINTENANCE **3-1**
3.1 Maintenance 3-1
3.2 How to Replace the Fuse 3-2
3.3 Troubleshooting 3-2
3.4 Self Test 3-3
3.5 How to Restore the Default Settings 3-5

4. INSTALLATION 4-1
4.1 Mounting 4-1
4.1.1 Main unit 4-1
4.1.2 Junction box (IF-900) 4-4
4.1.3 Antenna unit (NX-9HE) 4-5
4.2 Wiring 4-6
4.2.1 Main unit 4-6
4.2.2 Junction box (IF-900) 4-8
4.2.3 Wiring for RG-10/UY cable 4-10
4.2.4 Grounding 4-11
4.3 Printer Setup 4-11
4.4 [Initial Settings] Menu 4-12
4.4.1 Network settings 4-13
4.5 [Diagnostics] Menu 4-14
4.6 [Service] Menu 4-15

APPX. 1 MENU TREE AP-1
APPX. 2 DIGITAL INTERFACE AP-2
APPX. 3 JIS CABLE GUIDE AP-10
APPX. 4 ALERT LISTS AP-11
APPX. 5 ABBREVIATIONS AP-14
APPX. 6 PARTS LOCATION AP-16
APPX. 7 TERM OF USE FOR OPEN SOURCE SOFTWARE AP-17

SPECIFICATIONS SP-1
PACKING LIST(S) A-1
OUTLINE DRAWING(S) D-1
INTERCONNECTION DIAGRAM(S) S-1

INDEX IN-1

FOREWORD

A Word to NX-900 Owners

Congratulations on your choice of the FURUNO NX-900 NAVTEX Receiver. We are confident that you will enjoy many years of operation with this fine piece of equipment.

Since 1948, FURUNO Electric Company has enjoyed an enviable reputation for innovative and dependable marine electronics equipment. This dedication to excellence is furthered by our extensive global network of agents and dealers.

The NX-900 is just one of the many FURUNO developments in the field of marine radio communication. The NX-900 provides cost-effective price, high sensitivity and simple operation in one compact and light-weight unit. In addition to its fundamental function of receiving NAVTEX broadcasts, this unit can also function as nav data display when connected to navigation equipment.

This unit is designed and constructed to ensure the user many years of trouble-free operation. To obtain full performance from the equipment, however, you should carefully read and follow the recommended procedures for installation, operation and maintenance. No machine can perform its intended functions unless it is installed and maintained properly.

Thank you for considering and purchasing FURUNO equipment.

Features

NAVTEX (Navigational Telex) is a worldwide coastal telex broadcasting system. Coastal NAVTEX broadcasting stations with specific ID's transmit Navigational warnings, Meteorological warnings, Search and Rescue (SAR) information and other navigational information for NAVTEX receiver-equipped vessels sailing in coastal waters.

The FURUNO NX-900 NAVTEX receiver receives NAVTEX messages and automatically displays them together with station ID and message category information.

If ship's position data is fed from navigation equipment, the NX-900 automatically decides in which NAVAREA the vessel is navigating, and selects stations accordingly. (NAVAREAs are geographical zones defined by the International Maritime Organization.)

Program No.

0850202-01.**
** denotes minor modifications.

CE/UKCA Declaration

With regards to CE/UKCA declarations, please refer to our website (www.furuno.com), for further information about RoHS conformity declarations.

Disclosure of Information about China RoHS

With regards to China RoHS information for our products, please refer to our website (www.furuno.com).

SYSTEM CONFIGURATION

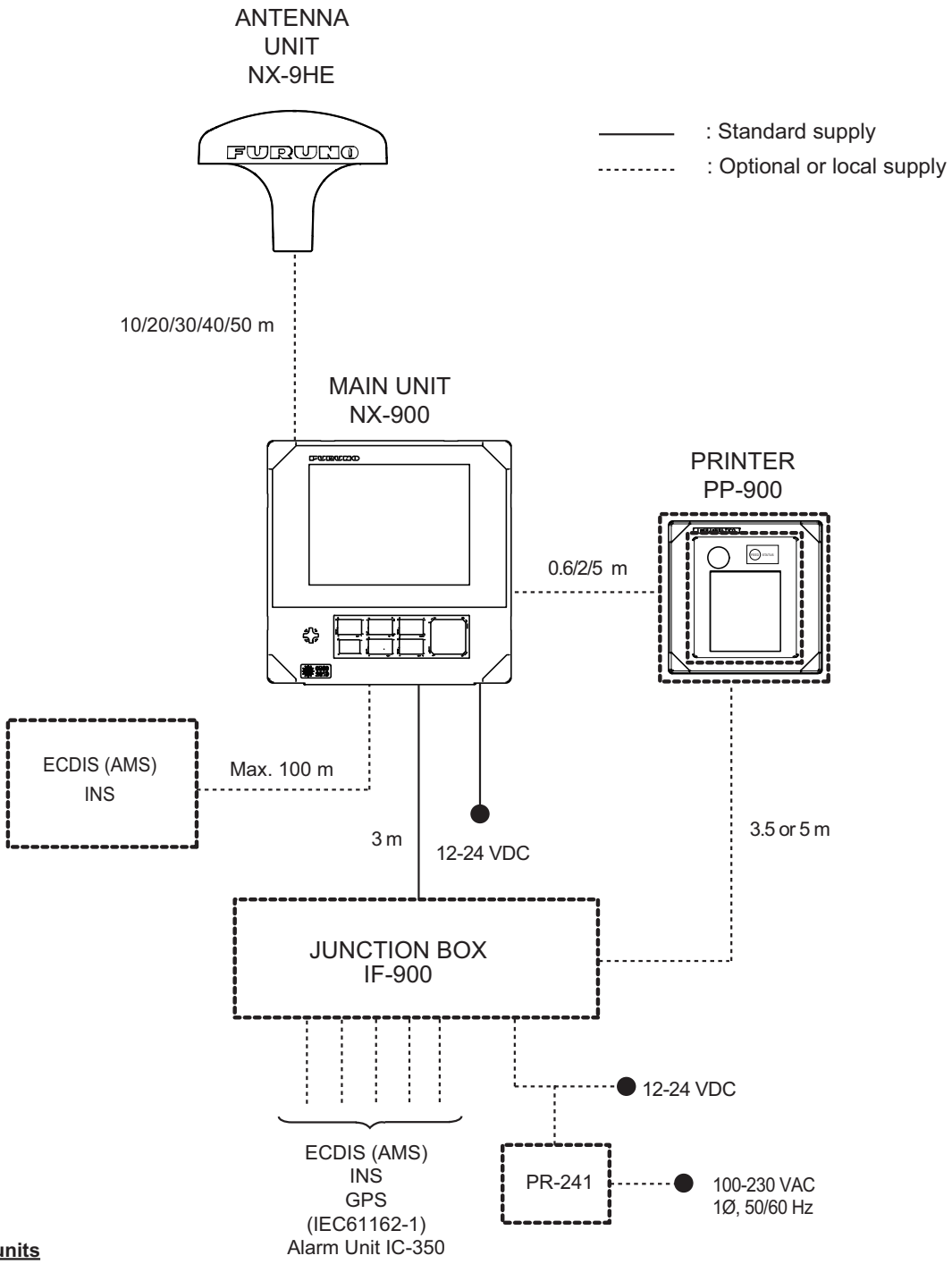

Category of units

Antenna unit	Exposed to the weather.
Others	Protected from the weather.

EQUIPMENT LISTS

Standard Supply

Name	Type	Code No.	Remarks
Main Unit	NX-900	-	Including bracket and knob bolts.
Antenna Unit	NX-9HE	-	-
Spare Parts	SP08-02501	001-644-810	
Installation Materials	CP08-02501	001-644-820	

Optional Supply

Name	Type	Code No.	Remarks
Printer	PP-900	-	
Cable Assembly	MJ-A6SPF0021A-006+	000-201-114-10	For PP-900, 0.6 m
	MJ-A6SPF0021A-020+	001-646-120	For PP-900, 2 m
	MJ-A6SPF0021A-050+	001-646-130	For PP-900, 5 m
	MJ-A6SPF0021B-020+	001-646-140	For PP-900, 2 m
	MJ-A6SPF0021B-050+	001-646-150	For PP-900, 5 m
Printer Power Cable	MJ-A3SPF0013A-050C	001-646-030	For PP-900, 5 m
Junction Box	IF-900	-	
Main Unit Cable Assy.	FRU-CF-F01-C02	001-646-040	5 m
	FRU-CF-F01-C03	001-646-050	10 m
AC-DC Power Supply	PR-241	-	100-230 VAC, 1ϕ, 50/60 Hz
Recording Paper	TP058-30CL	001-097-110	Width: 58 mm, Roll: 30 m
Flush Mount Kit	OP08-22	001-644-940	For Main unit/ Printer
Mast Mounting Kit	CP20-01111	004-365-780	For Antenna Unit (NX-9HE)
Armoured Coaxial Cable	RG-10/U-Y	001-234-860	10/20/30/40 or 50 m
		001-234-870	
		001-234-880	
		001-234-890	
		001-234-900	
Coaxial Cable	TNCP-TNCP-3DHR-L10M	001-646-060	3D-2V, 10 m
	TNCP-TNCP-3DHR-L20M	001-646-070	3D-2V, 20 m
	TNCP-TNCP-3DHR-L30M	001-646-080	3D-2V, 30 m
	TNCP-TNCP-3DHR-L40M	001-646-090	3D-2V, 40 m
	TNCP-TNCP-3DHR-L50M	001-646-100	3D-2V, 50 m
Coaxial Connector Exchange Cable	TNCP-MJ-3DHR-L01M	001-646-110	1 m
Coaxial Connector Adapter	TNCP-MJ	001-645-990	
Adaptor for coaxial cable	GSC-117/AD-3	000-166-978	
	GSC-118/AD-5	000-166-979	
Coaxial Connector	GSC-100/MP-7	001-519-370	For Armoured Coaxial Cable RG-10/U-Y

Name	Type	Code No.	Remarks
Twisted Pair Cable	COSPEVVSBC 2PX0.2LF	001-240-460	2 pair, 10 m
		001-240-480	2 pair, 20 m
		001-240-450	2 pair, 30 m
		001-240-500	2 pair, 40 m
		001-240-490	2 pair, 50 m
LAN Cable Assembly	MOD-WPAS0001-030+	001-588-860	Including waterproof cap, 3 m
Operator’s Manual	OME-57150	000-199-979	

This page is intentionally left blank.

1. PRINCIPLE OF NAVTEX SYSTEM

1.1 How NAVTEX Works

NAVTEX is an acronym meaning Navigational Telex, and as its name shows, it is a kind of narrow band radio teletype system for sending (by frequency shift keying) text messages expressed in a 7-unit code. The difference is that a NAVTEX transmitter transmits nine control characters (header code) ahead of the main message, so that the receiver can identify the station, message type and serial number automatically.

1.2 NAVTEX System Operation

For navigation purposes, the world is divided into 21 areas (called Navareas). Each Navarea has multiple NAVTEX stations and each NAVTEX station has an identification code, from “A” to “Z”. The frequency assigned to NAVTEX is 518 kHz (some stations use 490 or 4209.5 kHz also), and many stations exist in the same Navarea,
If the stations were to transmit without any rule, the system would collapse due to mutual interference. To avoid this problem, the following rules apply.

- The transmission schedule is determined so that two or more stations having a common service area may not overlap in time.
- Each station transmits with minimum required power to cover its service area (200 to 400 nautical miles nominal).

1.3 Message Format

For automatic identification of messages, each message starts with nine control characters, called “Header codes”. The first five characters are always “ZCZC_” and common to all messages. This part is used for message synchronization. The latter four characters are designed as B1, B2, B3 and B4 indicate origin, category and serial number of the message. Character B1 is the identification letter of the Navtex station “A” thru “Z”. Character B2 indicates the type of message. “A” thru “Z”, as listed below. Character B3 and B4 indicate the serial number of the message. The serial numbers are counted up from “01” to “99”, and starts from “01” again. Number “00” is specially reserved for important emergency messages. The end of each message is indicated by “NNNN” (four successive N’s). General message format is summarized below.

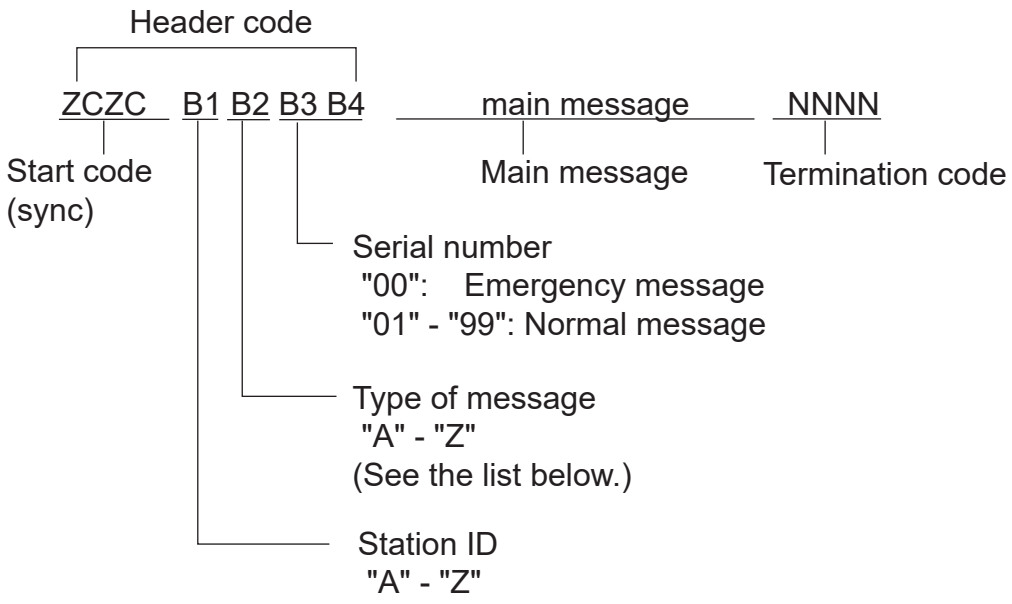

[Type of message (category)]

A:	navigational warning	I:	reserved presently not used
B:	meteorological warning	J:	SATNAV message
C:	ice report	K:	other electronic navigational aid system message
D:	search and rescue information/ piracy and armed robbery	L:	navigational warning (additional)
E:	meteorological forecast	M to Y:	reserved presently not used
F:	pilot message		
G:	AIS service message		
H:	LORAN-C message	Z:	QRU (no message on hand)

1.4 NAVTEX Station Map

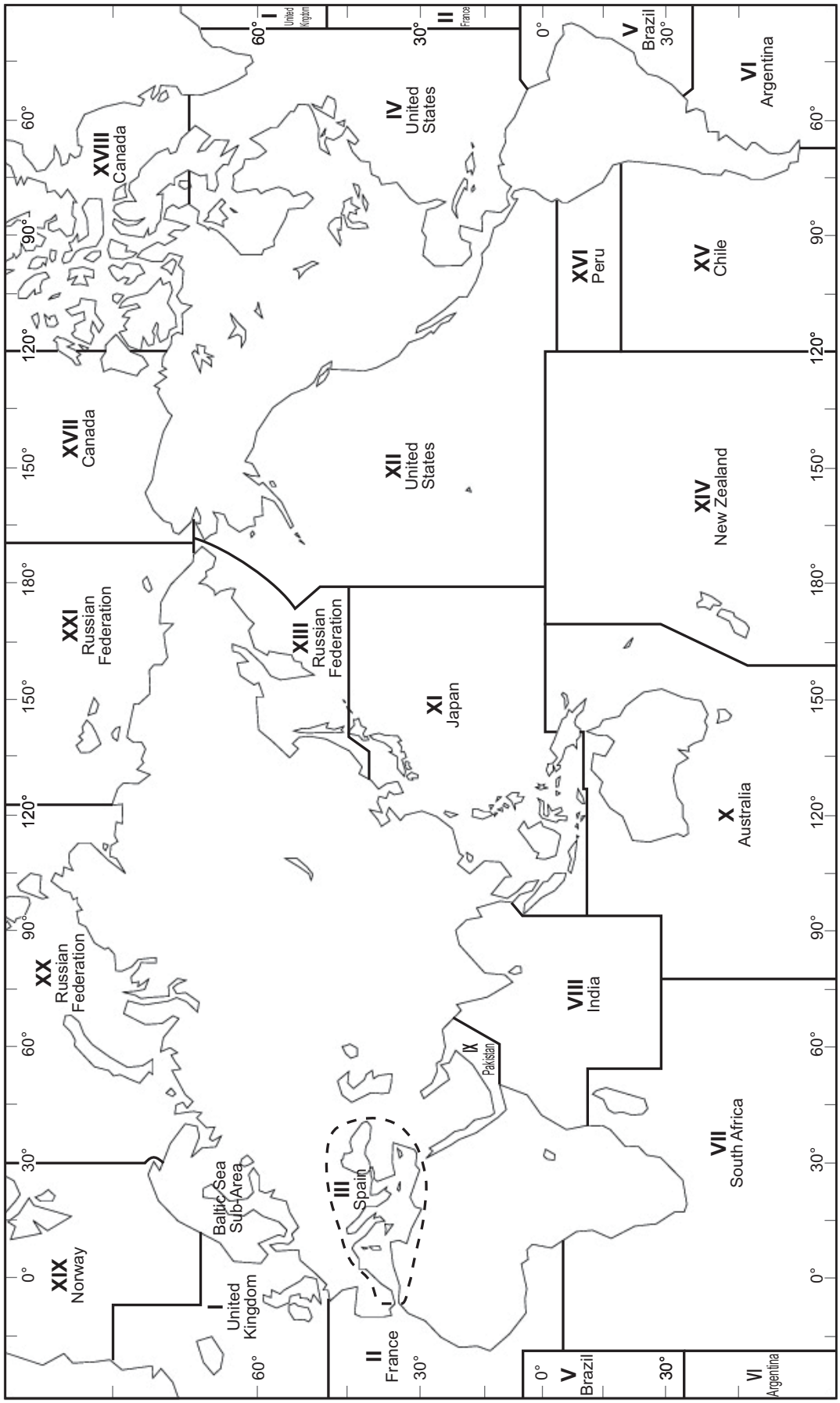

1.5 NAVTEX Station List

NAV area	Country	Station	Latitude	Longitude	Freq. (kHz)	Area (nm)	Station ID	Broadcast schedule (UTC)
I	Belgium	Oostende	51° 11' N	002° 48' E	518	55	V	0330, 0730, 1130, 1530, 1930, 2330
							T	0310, 0710, 1110, 1510, 1910, 2310
					490		B	0010, 0410, 0810, 1210, 1610, 2010
	Estonia	Tallinn	59° 28' N	024° 21' E	518	250	U	0320, 0720, 1120, 1520, 1920, 2320
	Foroyar (Denmark)	Torshavn	62° 01' N	006° 48' W	518	250	D	0030, 0430, 0830, 1230, 1630, 2030
	Germany	Hamburg	53° 40' N	009° 48' E	518	400	S	0300, 0700, 1100, 1500, 1900, 2300
					490		L	0150, 0550, 0950, 1350, 1750, 2150
	Iceland	Grindavik	63° 47' N	022° 31' W	518	550	X	0350, 0750, 1150, 1550, 1950, 2350
					490		K	0140, 0540, 0940, 1340, 1740, 2140
		Reykjavik Radio	64° 05' N	021° 51' W	518	550	R	0250, 0650, 1050, 1450, 1850, 2250
					490		R	0320, 0720, 1120, 1520, 1920, 2320
		Saudanes	66° 11' N	018° 57' W	490	550	E	0040, 0440, 0840, 1240, 1640, 2040
	Ireland	Valencia	51° 56' N	010° 21' W	518	400	W	0340, 0740, 1140, 1540, 1940, 2340
		Malin Head	55° 22' N	007° 21' W	518	400	Q	0240, 0640, 1040, 1440, 1840, 2240
	Netherlands	Den Helder	52° 06' N	004° 15' E	518	110	P	0230, 0630, 1030, 1430, 1830, 2230
	Norway	Rogaland Radio	58° 48' N	005° 34' E	518	450	L	0150, 0550, 0950, 1350, 1750, 2150
		Orlandet	63° 40' N	009° 33' E	518	450	N	0210, 0610, 1010, 1410, 1810, 2210
		Tjome (Jeloya)	59° 26' N	010° 34' E	518	450	M	2000, 0600, 1000, 1400, 1800, 2200
	Sweden	Bjuroklubb	64° 28' N	021° 35' E	518	300	H	0110, 0510, 0910, 1310, 1710, 2110
		Gislovshammar	55° 29' N	014° 19' E	518	300	J	0130, 0530, 0930, 1330, 1730, 2130
		Grimeton	57° 06' N	012° 23' E	518	300	I	0120, 0520, 0920, 1320, 1720, 2120
	United Kingdom	Cullercoats	55° 02' N	001° 26' W	518	270	G	0100, 0500, 0900, 1300, 1700, 2100
					490		U	0320, 0720, 1120, 1520, 1920, 2320
		Portpatrick	54° 51' N	005° 07' W	518	270	O	0220, 0620, 1020, 1420, 1820, 2220
					490		C	0020, 0420, 0820, 1220, 1620, 2020
		Niton	50° 35' N	001° 18' W	518	270	E	0040, 0440, 0840, 1240, 1640, 2040
							K	0140, 0540, 0940, 1340, 1740, 2140
					490		I	0120, 0520, 0920, 1320, 1720, 2120
							T	0310, 0710, 1110, 1510, 1910, 2310

(Continued on next page)

NAV area	Country	Station	Latitude	Longitude	Freq. (kHz)	Area (nm)	Station ID	Broadcast schedule (UTC)
II	Cape Verde	Sao Vicente	16° 51' N	025° 00' W	518	250	U	0320, 0720, 1120, 1520, 1920, 2320
					490		P	0310, 0710, 1110, 1510, 1910, 2310
	France	Corsen	48° 28' N	005° 03' W	518	300	A	0000, 0400, 0800, 1200, 1600, 2000
					490		E	0040, 0440, 0840, 1240, 1640, 2040
	Morocco	Casablanca Radio	33° 36' N	007° 38' W	518	400	M	0200, 0600, 1000, 1400, 1800, 2200
	Portugal	Horta	38° 32' N	028° 38' W	518	640	F	0050, 0450, 0850, 1250, 1650, 2050
					490		J	0130, 0530, 0930, 1330, 1730, 2130
		Monsanto	38° 44' N	009° 11' W	518	530	R	0250, 0650, 1050, 1450, 1850, 2250
					490		G	0100, 0500, 0900, 1300, 1700, 2100
	Senegal	Dakar	14° 46' N	017° 21' E	518	200	C	0020, 0420, 0820, 1220, 1620, 2020
					490		M	0200, 0600, 1000, 1400, 1800, 2200
	Spain	Coruna	43° 21' N	008° 27' W	518	400	D	0030, 0430, 0830, 1230, 1630, 2030
					490		W	0340, 0740, 1140, 1540, 1940, 2340
		Las Palmas	28° 10' N	015° 25' W	518	400	I	0120, 0520, 0920, 1320, 1720, 2120
					490		A	0000, 0400, 0800, 1200, 1600, 2000
		Tarifa	36° 01' N	005° 34' W	518	400	G	0100, 0500, 0900, 1300, 1700, 2100
					490		T	0310, 0710, 1110, 1510, 1910, 2310
III	Algeria	Algiers	36° 44' N	003° 10' E	518	250	B	0010, 0410, 0810, 1210, 1610, 2010
					490		V	0330, 0730, 1130, 1530, 1930, 2330
	Bulgaria	Varna	43° 04' N	027° 46' E	518	350	J	0130, 0530, 0930, 1330, 1730, 2130
	Croatia	Split	43° 30' N	016° 29' E	518	85	Q	0240, 0640, 1040, 1440, 1840, 2240
	Cyprus	Cyprus	35° 03' N	033° 17' E	518	200	M	0200, 0600, 1000, 1400, 1800, 2200
	Egypt	Alexandria	31° 12' N	029° 52' E	518	350	N	0210, 0610, 1010, 1410, 1810, 2210
	France	La Garde	43° 06' N	005° 59' E	518	250	W	0340, 0740, 1140, 1540, 1940, 2340
					490		S	0300, 0700, 1100, 1500, 1900, 2300
	Greece	Iraklion	35° 20' N	025° 07' E	518	280	H	0110, 0510, 0910, 1310, 1710, 2110
		Kerkyra	39° 37' N	019° 55' E	518	280	K	0140, 0540, 0940, 1340, 1740, 2140
		Limnos	39° 52' N	025° 04' E	518	280	L	0150, 0550, 0950, 1350, 1750, 2150
	Iran	Now Shahr	36° 42' N	052° 33' E	490	250	J	0130, 0530, 0930, 1330, 1730, 2130
	Israel	Haifa	32° 49' N	035° 00' E	518	200	P	0020, 0420, 0820, 1220, 1620, 2020

(Continued on next page)

NAV area	Country	Station	Latitude	Longitude	Freq. (kHz)	Area (nm)	Station ID	Broadcast schedule (UTC)
III	Italy	La Maddalena	41° 13' N	009° 23' E	518	400	R	0250, 0650, 1050, 1450, 1850, 2250
					490		I	0120, 0520, 0920, 1320, 1720, 2120
		Sellia Marina	38° 52' N	016° 43' E	518	400	V	0330, 0730, 1130, 1530, 1930, 2330
					490		W	0340, 0740, 1140, 1540, 1940, 2340
		Mondolfo	43° 44' N	013° 08' E	518	400	U	0320, 0720, 1120, 1520, 1920, 2320
					490		E	0040, 0440, 0840, 1240, 1640, 2040
		Tunis	36° 53' N	010° 11' E	518	400	T	0310, 0710, 1110, 1510, 1910, 2310
	Malta	Malta	35° 49' N	014° 32' E	518	400	O	0220, 0620, 1020, 1420, 1820, 2220
	Romania	Constanta	44° 06' N	028° 37' E	490	400	L	0550, 0950, 1350, 1750, 2150, 0150
	Russia	Astrakhan	45° 47' N	047° 33' E	518	250	W	0340, 0740, 1140, 1540, 1940, 2340
		Novorossiysk	44° 36' N	037° 58' E	518	300	A	0300, 0700, 1100, 1500, 1900, 2300
	Spain	Valencia	38° 43' N	000° 09' E	518	300	X	0350, 0750, 1150, 1550, 1950, 2350
					490		M	0200, 0600, 1000, 1400, 1800, 2200
	Turkey	Istanbul	41° 04' N	028° 57' E	518	300	D	0030, 0430, 0830, 1230, 1630, 2030
					490		B	0010, 0410, 0810, 1210, 1610, 2010
		Samsun	41° 17' N	036° 20' E	518	300	E	0040, 0440, 0840, 1240, 1640, 2040
					490		A	0000, 0400, 0800, 1200, 1600, 2000
		Antalya	36° 53' N	030° 42' E	518	300	F	0050, 0450, 0850, 1250, 1650, 2050
					490		D	0030, 0430, 0830, 1230, 1630, 2030
		Izmir	38° 21' N	026° 35' E	518	300	I	0120, 0520, 0920, 1320, 1720, 2120
					490		C	0020, 0420, 0820, 1220, 1620, 2020
	Ukraine	Kerch	45° 22' N	036° 29' E	518	120	G	0100, 0500, 0900, 1300, 1700, 2100
					490		U	0320, 0720, 1120, 1520, 1920, 2320
		Odessa	46° 29' N	030° 44' E	518	280	C	0230, 0630, 1030, 1430, 1830, 2230
					490		X	0350, 0750, 1150, 1550, 1950, 2350
IV	Bermuda (UK)	Bermuda	32° 23' N	064° 41' W	518	280	B	0010, 0410, 0810, 1210, 1610, 2010
	Canada	Riviere-au-Renard	50° 11' N	066° 07' W	518	300	C	0020, 0420, 0820, 1220, 1620, 2020
					490		D	0035, 0435, 0835, 1235, 1635, 2035
		Wiarton	44° 20' N	081° 10' W	518	300	H	0110, 0510, 0910, 1310, 1710, 2110
		St. Johns	47° 30' N	052° 40' W	518	300	O	0220, 0620, 1020, 1420, 1820, 2220
		Thunder Bay	48° 25' N	089° 20' W	518	300	P	0230, 0630, 1030, 1430, 1830, 2230
		Sydney, NS	46° 10' N	060° 00' W	518	300	Q	0240, 0640, 1040, 1440, 1840, 2240
					490		J	0255, 0655, 1055, 1455, 1855, 2255
		Yarmouth	43° 45' N	066° 10' W	518	300	U	0320, 0720, 1120, 1520, 1920, 2320
					490		V	0335, 0735, 1135, 1535, 1935, 2335
		Montreal	45° 41' N	073° 16' W	518	400	W	0340, 0740, 1140, 1540, 1940, 2340

(Continued on next page)

NAV area	Country	Station	Latitude	Longitude	Freq. (kHz)	Area (nm)	Station ID	Broadcast schedule (UTC)
IV	Canada	Labrador	53° 42' N	057° 01' W	518	300	X	0350, 0750, 1150, 1550, 1950, 2350
		Iqaluit, NU	63° 43' N	068° 33' W	518	300	T	0310, 0710, 1110, 1510, 1910, 2310
					490		S	0300, 0700, 1100, 1500, 1900, 2300
	Greenland	Kook Island (Nuuk)	64° 04' N	052° 01' W	518	400	W	0340, 0740, 1140, 1540, 1940, 2340
		Simiutaq	60° 37' N	046° 21' W	518	400	M	0200, 0600, 1000, 1400, 1800, 2200
	United States	Miami	25° 37' N	080° 23' W	518	240	A	0000, 0400, 0800, 1200, 1600, 2000
		Boston	41° 43' N	070° 30' W	518	200	F	0050, 0450, 0850, 1250, 1650, 2050
		New Orleans	29° 53' N	089° 57' W	518	200	G	0100, 0500, 0900, 1300, 1700, 2100
		Portsmouth	36° 43' N	076° 00' W	518	280	N	0210, 0610, 1010, 1410, 1810, 2210
		San Juan	18° 28' N	067° 04' W	518	200	R	0250, 0650, 1050, 1450, 1850, 2250
		Charleston	32° 08' N	081° 42' W	518	200	E	0040, 0440, 0840, 1240, 1640, 2040
	Netherlands Antilles	Curacao	12° 10' N	068° 52' W	518	400	H	0110, 0510, 0910, 1310, 1710, 2110
V	NIL							
VI	Argentina	Ushaia	54° 48' S	068° 18' W	518	280	M	0200, 0600, 1000, 1400, 1800, 2200
					490		A	0000, 0400, 0800, 1200, 1600, 2000
		Rio Gallegos	51° 37' S	069° 03' W	518	280	N	0210, 0610, 1010, 1410, 1810, 2210
					490		B	0010, 0410, 0810, 1210, 1610, 2010
		Rivadavia	45° 51' S	067° 25' W	518	280	O	0220, 0620, 1020, 1420, 1820, 2220
					490		C	0020, 0420, 0820, 1220, 1620, 2020
		Bahia Blanca	38° 43' S	062° 06' W	518	280	P	0230, 0630, 1030, 1430, 1830, 2230
					490		D	0230, 0630, 1030, 1430, 1830, 2230
		Mar del Plata	38° 03' S	057° 32' W	518	280	Q	0240, 0640, 1040, 1440, 1840, 2240
					490		E	0040, 0440, 0840, 1240, 1640, 2040
		Buenos Aires	34° 36' S	058° 22' W	518	560	R	0250, 0650, 1050, 1450, 1850, 2250
					490		F	0050, 0450, 0850, 1250, 1650, 2050
	Uruguay	La Paloma	34° 40' S	054° 09' W	518	280	F	0050, 0450, 0850, 1250, 1650, 2050
					490		A	0000, 0400, 0800, 1200, 1600, 2000
VII	Namibia	Walvis Bay	23° 03' S	014° 37' E	518	378	B	0010, 0410, 0810, 1210, 1610, 2010
	South Africa	Cape Town	33° 40' S	018° 43' E	518	300	C	0020, 0420, 0820, 1220, 1620, 2020
		Port Elizabeth	34° 02' S	025° 33' E	518	300	I	0120, 0520, 0920, 1320, 1720, 2120
		Durban	29° 48' S	030° 49' E	518	300	O	0220, 0620, 1020, 1420, 1820, 2220
VIII	India	Mumbai (Bombay)	19° 05' N	072° 50' E	518	250	G	0100, 0500, 0900, 1300, 1700, 2100
		Madras	13° 05' N	080° 17' E	518	400	P	0230, 0630, 1030, 1430, 1830, 2230
	Mauritius	Mauritius	20° 10' S	057° 28' E	518	400	C	0020, 0420, 0820, 1220, 1620, 2020

(Continued on next page)

NAV area	Country	Station	Latitude	Longitude	Freq. (kHz)	Area (nm)	Station ID	Broadcast schedule (UTC)
IX	Bahrain	Hamala	26° 09' N	050° 28' E	518	300	B	0010, 0410, 0810, 1210, 1610, 2010
	Egypt	Ismailia	30° 28' N	032° 22' E	518	200	X	0350, 0750, 1150, 1550, 1950, 2350
					4209.5		X	0750, 1150
		Quseir (Kosseir)	26° 06' N	034° 17' E	518	400	V	0330, 0730, 1130, 1530, 1930, 2330
	Iran	Bandar Abbas	27° 07' N	056° 03' E	518	300	F	0050, 0450, 0850, 1250, 1650, 2050
					490		I	0120, 0520, 0920, 1320, 1720, 2120
		Bushehr	28° 59' N	050° 49' E	518	300	A	0000, 0400, 0800, 1200, 1600, 2000
					490		D	0030, 0430, 0830, 1230, 1630, 2030
	Oman	Muscat	23° 36' N	058° 30' E	518	270	M	0200, 0600, 1000, 1400, 1800, 2200
	Pakistan	Karachi	24° 51' N	067° 03' E	518	400	P	0230, 0630, 1030, 1430, 1830, 2230
	Saudi Arabia	Jeddah	21° 23' N	039° 10' E	518	390	H	0705, 1305, 1905
		Damman	26° 26' N	050° 06' E	518	390	G	0100, 0500, 0900, 1300, 1700, 2100
X	NIL							
XI	China	Sanya	18° 14' N	109° 30' E	518	250	M	0200, 0600, 1000, 1400, 1800, 2200
		Guangzhou	23° 09' N	113° 29' E	518	250	N	0210, 0610, 1010, 1410, 1810, 2210
		Fuzhou	26° 01' N	119° 18' E	518	250	O	0220, 0620, 1020, 1420, 1820, 2220
		Shanghai	31° 08' N	121° 33' E	518	250	Q	0240, 0640, 1040, 1440, 1840, 2240
		Dalian	38° 52' N	121° 31' E	518	250	R	0250, 0650, 1050, 1450, 1850, 2250
	Hong Kong	Hong Kong	22° 13' N	114° 15' E	518	400	L	0150, 0550, 0950, 1350, 1750, 2150
	Indonesia	Jayapura	02° 31' S	140° 43' E	518	300	A	0000, 0400, 0800, 1200, 1600, 2000
		Ambon	03° 42' S	128° 12' E	518	300	B	0010, 0410, 0810, 1210, 1610, 2010
		Makassar	05° 06' S	119° 26' E	518	300	D	0030, 0430, 0830, 1230, 1830, 2030
		Jakarta	06° 06' S	106° 54' E	518	300	E	0040, 0440, 0840, 1240, 1640, 2040
	Japan	Otaru	43° 19' N	140° 27' E	518	400	J	0130, 0530, 0930, 1330, 1730, 2130
		Kushiro	42° 57' N	144° 36' E	518	400	K	0140, 0540, 0940, 1340, 1740, 2140
		Yokohama	35° 14' N	139° 55' E	518	400	I	0120, 0520, 0920, 1320, 1720, 2120
		Moji	34° 01' N	130° 56' E	518	400	H	0110, 0510, 0910, 1310, 1710, 2110
		Naha	26° 05' N	127° 40' E	518	400	G	0100, 0500, 0900, 1300, 1700, 2100
	Korea, Republic of	Chukpyong	37° 03' N	129° 26' E	518	200	V	0330, 0730, 1130, 1530, 1930, 2330
					490		J	0130, 0530, 0930, 1330, 1730, 2130
		Pyongsan	35° 36' N	126° 29' E	518	200	W	0340, 0740, 1340, 1540, 1940, 2340
					490		K	0140, 0540, 0940, 1340, 1740, 2140
	Malaysia	Penang	05° 26' N	100° 24' E	518	350	U	0320, 0720, 1120, 1520, 1920, 2320
		Miri	04° 28' N	114° 01' E	518	350	T	0310, 0710, 1110, 1510, 1910, 2310
		Sandakan	05° 54' N	118° 00' E	518	350	S	0300, 0700, 1100, 1500, 1900, 2300

(Continued on next page)

NAV area	Country	Station	Latitude	Longitude	Freq. (kHz)	Area (nm)	Station ID	Broadcast schedule (UTC)
XI	North Korea	Hamhung	39° 50' N	127° 41' E	518	200	E	0040, 0440, 0840, 1240, 1840, 2240
					490		B	0010, 0410, 0810, 1210, 1610, 2210
		Pyongyang	38° 55' N	125° 43' E	518	200	D	0030, 0430, 0830, 1230, 1830, 2230
					490		A	0000, 0400, 0800, 1200, 1600, 2200
	Philippines	Davao	07° 04' N	125° 36' E	518	400	K	0140, 0540, 0940, 1340, 1740, 2140
		Manila	14° 35' N	121° 03' E	518	400	J	0130, 0530, 0930, 1330, 1730, 2130
		Puerto Princesa	09° 44' N	118° 43' E	518	400	I	0120, 0520, 0920, 1320, 1720, 2120
	Singapore	Singapore	01° 21' N	103° 59' E	518	400	C	0020, 0420, 0820, 1220, 1620, 2020
	Taiwan	Kaohsiung	22° 29' N	120° 25' E	518	216	P	0230, 0630, 1030, 1430, 1830, 2230
		Chilung	25° 09' N	121° 44' E	518	400	P	0230, 0630, 1030, 1430, 1830, 2230
	Thailand	Bangkok	13° 43' N	100° 34' E	518	200	F	0050, 0450, 0850, 1250
	United States	Guam	13° 29' N	144° 50' E	518	100	V	0330, 0730, 1130, 1530, 1930, 2330
	Vietnam	Ho Chi Minh City	10° 23' N	107° 08' E	518	400	X	0350, 0750, 1150, 1550, 1950, 2350
		Haiphong	20° 44' N	106° 44' E	4209.5	400	W	0230, 0630, 1030, 1430, 1830, 2230
					490		W	0340, 0740, 1140, 1540, 1940, 2340
		Danang	16° 05' N	108° 13' E	518	400	K	0140, 0540, 0940, 1340, 1740, 2140
XII	Canada	Prince Rupert	54° 20' N	130° 20' W	518	300	D	0030, 0430, 0830, 1230, 1630, 2030
		Tofino	48° 55' N	125° 35' W	518	300	H	0110, 0510, 0910, 1310, 1710, 2110
	Ecuador	Ayora	00° 45' S	090° 19' W	518	400	L	0150, 0550, 0950, 1350, 1750, 2150
					490		A	0000, 0400, 0800, 1200, 1600, 2000
	United States	San Francisco	37° 55' N	122° 44' W	518	350	C	0020, 0420, 0820, 1220, 1620, 2020
		Kodiak (EAST)	57° 46' N	152° 34' W	518	200	J	0130, 0530, 0930, 1330, 1730, 2130
		Kodiak (WEST)					X	0350, 0750, 1150, 1550, 1950, 2250
		Honolulu	21° 22' N	158° 09' W	518	350	O	0220, 0620, 1020, 1420, 1820, 2220
		Cambria	35° 31' N	121° 03' W	518	350	Q	0240, 0640, 1040, 1440, 1840, 2240
		Astoria	46° 10' N	123° 49' W	518	216	W	0340, 0740, 1140, 1540, 1940, 2240
XIII	Russia	Beringovskiy	63° 03' N	179° 20' E	518	400	E	0040, 0440, 0840, 1240, 1640, 2040
		Kholmsk	47° 02' N	142° 03' E	518	300	B	0010, 0410, 0810, 1210, 1610, 2010
		Magadan	59° 41' N	150° 09' E	518	120	D	0030, 0430, 0830, 1230, 1630, 2030
		Okhotsk	59° 22' N	143° 12' E	518	300	G	0100, 0500, 0900, 1300, 1700, 2100
		Petropavlovsk	53° 00' N	158° 40' E	518	300	C	0020, 0420, 0820, 1220, 1620, 2020
		Provideniya	64° 40' N	173° 10' W	518	400	F	0050, 0450, 0850, 1250, 1650, 2050
		Vladivostok	43° 23' N	131° 54' E	518	230	A	0000, 0400, 0800, 1200, 1600, 2000
XIV	NIL							

(Continued on next page)

NAV area	Country	Station	Latitude	Longitude	Freq. (kHz)	Area (nm)	Station ID	Broadcast schedule (UTC)
XV	Chile	Antofagasta	23° 40' S	070° 25' W	518	300	A	0400, 1200, 2000
							H	0000, 0800, 1600
		Valparaiso	32° 48' S	071° 29' W	518	300	B	0410, 1210, 2010
							I	0010, 0810, 1610
		Talcahuano	36° 42' S	073° 06' W	518	300	C	0420, 1220, 2020
							J	0020, 0820, 1620
		Puerto Montt	41° 30' S	072° 58' W	518	300	D	0430, 1230, 2030
							K	0030, 0830, 1630
		Punta Arenas	53° 09' S	070° 58' W	518	300	E	0440, 1240, 2040
							L	0040, 0840, 1640
		Isla de Pascua	27° 09' S	109° 25' W	518	300	F	0450, 1250, 2050
							G	0050, 0850, 1650
XVI	Ecuador	Guayaquil	02° 17' S	079° 52' W	518	400	M	0200, 0600, 1000, 1400, 1800, 2200
	Peru	Paita	05° 05' S	081° 07' W	518	200	S	0300, 0700, 1100, 1500, 1900, 2300
		Callao	12° 03' S	077° 09' W	518	200	U	0320, 0720, 1120, 1520, 1920, 2320
		Mollendo	17° 01' S	072° 01' W	518	200	W	0340, 0740, 1140, 1540, 1940, 2340
XVII	NIL							
XVIII* (EXT)	Greenland	Uppernavik	72° 47' N	056° 07' W	518	400	I	0120, 0520, 0920, 1320, 1720, 2120
XIX* (I)	Norway	Bodo	67° 16' N	014° 23' E	518	450	B	0010, 0410, 0810, 1210, 1610, 2010
		Vardoe Radio	70° 22' N	031° 06' E	518	450	C	0020, 0420, 0820, 1220, 1620, 2020
		Svalbard	78° 04' N	013° 38' E	518	450	A	0000, 0400, 0800, 1200, 1600, 2000
XX* (I)	Russia	Arkhangelsk	64° 51' N	040° 17' E	518	300	L	0150, 0550, 0950, 1350, 1750, 2150
		Murmansk	68° 46' N	032° 58' E	518	300	K	0140, 0540, 0940, 1340, 1740, 2140
XXI* (XIII)	Russia	Tiksi	71° 38' N	128° 50' E	518	300	Q	0240, 0640, 1040, 1440, 1840, 2240

*: This equipment can not set the NAV area numbers from XVIII to XXI. These are registered as the NAV area numbers in the parentheses in the above list (i.e. EXT, I or XIII).

2. OPERATION

2.1 Operating Controls

No.	Key	Description
1	▲▼◀▶ (TrackPad)	• Moves the cursor. • Changes the frequency. • Selects messages. • Select items on menus.
2	MENU/ESC	• Opens menu. • Returns to the previous display. • Cancels option.
3	**ENT/ACK**	• Confirms the selected menu/operation. • Shows the selected message. • Acknowledges alerts.
4	**MSG/FILTER**	• Opens the message list or message information display. • Opens the filter display.
5	**ALERT LIST**	• Shows the alert list display.
6	**PRINT**	Opens the print option display.
7	⏻**/BRILL**	Short press: • Turns the power on (when the system is off). • Shows the [Brill Level Setup] display (when the system is on). Long press: • Turns the power off (3 sec).
8	Buzzer	Activates key beeps and alert sounds.

2.2 How to Turn the Power On/Off

Press the ⏻ **/BRILL** key to turn the unit on. A beep sounds and the equipment shows the start up display, which is shown below. The ROM and RAM are checked for proper operation and the program no. display appears. The results of the check are shown as OK or NG (No Good).

When the results of the check are OK, press any key (or wait for 5 s) to show the message list with frequency last used before the power was turned off.

Start-up screen

To turn the power off, press and hold the ⏻ **/BRILL** key for three seconds. The time remaining until the power is turned off is counted down on the screen as shown below.

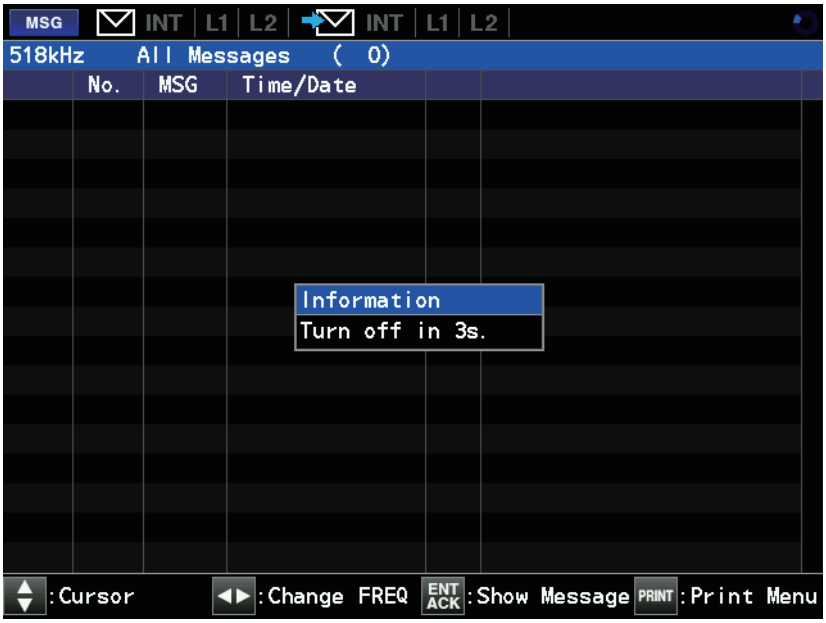

2.3 Status Bar (Header) Icons

The status bar (header) shows various icons indicating the status of the equipment. The icons which can be displayed in the header are listed in the table below.

Header example

Icon	Name	Description
MENU ALERT MSG	Display mode icon	• MENU: User menu display. • ALERT: Alert display. • MSG: Message/filter display, Message detail display.
	Active indicator	Displayed and spinning when the program is running (rotates one cycle approx. in every 2 seconds). If the program is stopped, the spinning stops.
INT L1 L2 INT L1 L2	Message received icon	Displayed in blue when receiving a message for each frequency as follows (otherwise displayed in gray): • [INT]: 518 kHz* • [L1]: 490 kHz* • [L2]: 4209.5 kHz* *: See section 2.9.
INT L1 L2 INT L1 L2	Unread message icon	Displayed in blue when unread message exists for each frequency as follows (otherwise displayed in gray): • [INT]: 518 kHz* • [L1]: 490 kHz* • [L2]: 4209.5 kHz* *: See section 2.9.
	Printer icon	Displayed when the printer connection is lost, recording paper has run out, or when printer unit cover is open.
		Displayed during printing.
	Remote monitoring icon	Displayed when remote monitoring is in use. See section 4.4 for details about the remote monitoring function.

2.4 How to Adjust the Display Brilliance/Panel Dimmer

2.4.1 How to adjust display brilliance/panel dimmer

The display brilliance/panel dimmer can be adjusted by short pressing the ⏻**/BRILL** key. The display shown below appears. Use ◀▶ to adjust the display brilliance and ▲▼ to adjust the panel dimmer values (default: 17), then press the **ENT/ACK** key. Press **the MSG/FILTER** key to change between the [Day] or [Night] modes (default: [Day]).

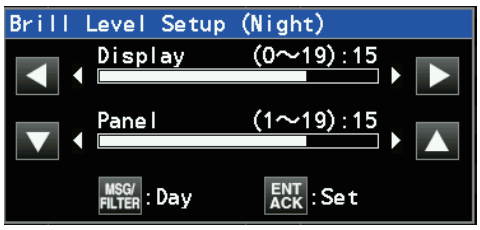

Note: If the setting value for display/panel is less than 7, the value automatically rises to 7 when the power is applied, an alert occurs, or when a key is operated. If none of the above mentioned events occur, the display brilliance can be adjusted from 0 to 6 and the panel dimmer from 1 to 6.

2.4.2 Display/panel dimmer preset

You can set the brightness of the display and panel when the [Day] or [Night] mode is selected.

1. Press the **MENU/ESC** key to open the main menu.
2. Select [Display] and press the **ENT/ACK** key.
3. Select [Dimmer Preset] and press the **ENT/ACK** key to show the following display.

4. Use ▲ or ▼ to select [Day] or [Night] mode for [Display] dimmer, then press the **ENT/ACK** key. The setting range is 0 (dark) to 19 (bright).
5. Set the value and press the **ENT/ACK** key.
   - ▲: Raises the dimmer.
   - ▼: Decreases the dimmer.
6. Repeat steps 4 and 5 for [Panel] dimmer. The setting range is 1 (dim) to 19 (bright).
7. Press the **MENU/ESC** key to close the menu.

2.5 Messages

2.5.1 How to receive a message

When a new message is received, the pop-up window appears on the display. If you want to read the message immediately, press the **ENT/ACK** key to select “Yes” to open the message. To read the message later, select “No”. If a SAR message is received, the filter menu settings are changed to [All Messages] and the message content is shown on the display.

International message

Local message

When an unread message exists, the unread message icon ( ) appears at the left side of the message list as shown below.

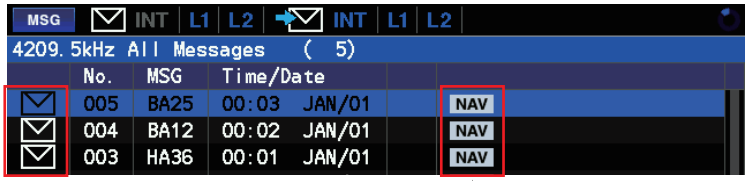

Unread message icons

Message type; SAR, NAV, MET

Note 1: When a SAR message is received, the message content is automatically shown on the display.

Note 2: A message icon(s) is also shown on the header of the display when a new message is received (see section 2.3 for details).

2.5.2 How to open the message

Use ▲▼ to select desired message on the message list and press the **ENT/ACK** key to see the details of the message. To return to the message list display, press the ENT/ACK key again.

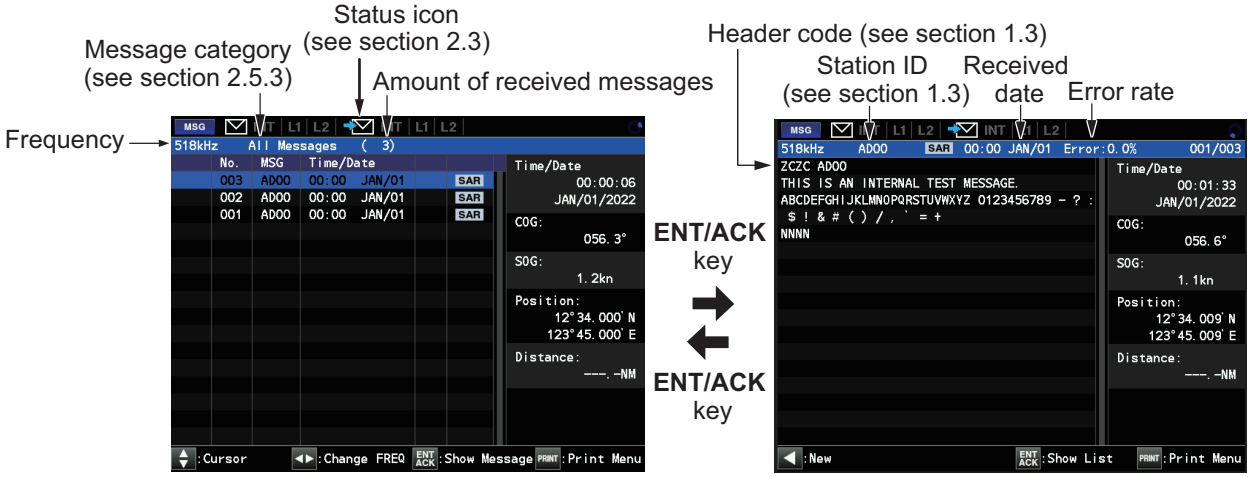

2.5.3 How to select message category to display

The category of messages to display can be selected by pressing the **MSG/FILTER** key. Use ▲▼ keys to select the desired message category and press the **ENT/ACK** key.

- [All Messages]: Shows all received messages.
- [Alert Messages]: Shows only alert (SAR, NAV, MET) messages.
- [User Selected Messages]: Shows messages arranged at [User Select Station & Message] display (see section 2.8 for details).
- [Good Messages]: Shows messages whose error rate is 4% or less.
- [Lock Message] / [Unlock Message]: Select to lock or unlock the desired message. The protect icon ( ) appears next to the message when locked (see subsection 2.5.4 for details).
  Note 1: When there are no received messages, [Lock Message] / [Unlock Message] is not shown on the menu.
  Note 2: When SAR messages are received, the setting changes to [All Messages] display mode.

2.5.4 How to lock and unlock a message

Messages are automatically deleted from the memory under the following conditions.

- 66 hours passed from the moment when the message was received.
- There are more than 200 received messages (the message is older than No. 200).

When the validity of message is expired under the conditions mentioned above, the following window appears. To prevent messages from being deleted, you can lock the desired messages.

How to lock a message

1. Select the message on the message list display.
2. Press the **MSG/FILTER** key to show the list options.
3. Select [Lock Message] and press the **ENT/ACK** key. The icon ( ) appears and the message is safely locked.

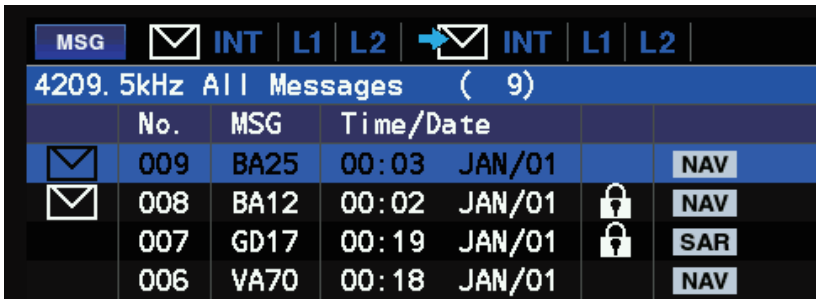

How to unlock a message

1. To unlock a message, select the locked message on the list and press the **MSG/ FILTER** key to show the list options.
2. Select [Unlock Message] and press the **ENT/ACK** key. The protect icon disappears and the message is unlocked.

Note: A message that is received more than 66 hours ago will be deleted promptly when unlocked.

2.5.5 How to print messages

Received messages can be printed by using an external printer. See also section 4.3 for how to setup the printer.

How to print all displayed messages

1. Select the category of messages to print ([All Messages]/ [Alert Messages]/ [User Selected Messages]/ [Good Messages]) and press the ENT/ACK key.
2. Press the **PRINT** key to display the pop-up window shown in the right-hand figure.
3. Select [Print (All FREQ)] or [Print (This FREQ)] and press the ENT/ACK key to print.

   - [Print (All FREQ)]: Print out the messages of all frequencies (the messages that will be printed out depends on the filter settings).
   - [Print (This FREQ)]: Print out only the messages of the currently used frequency (the messages printed depends on the filter settings).
4. To cancel printing, select [Cancel] and press the ENT/ACK key.
5. Press the **MENU/ESC** key to close the menu.

How to print selected messages

1. Use ▲▼ keys to select the desired message from the list.
2. Press the ENT/ACK key to show the detailed information of the message.
3. Press the **PRINT** key to display the pop-up window shown in the right-hand figure.

4. Select [Print] and press the ENT/ACK key to print.
5. To cancel printing, select [Cancel] and press the ENT/ACK key.
6. Press the **MENU/ESC** key to close the menu.

2.6 Alerts

The buzzer sounds when alerts prioritized as warning occur and is accompanied by a flashing indication at the bottom of the screen. Press the **ENT/ACK** key to silence the buzzer and acknowledge the alert. The indication at the bottom of the screen remains until the alert cause is removed or rectified. If there are multiple alerts, each alert must be acknowledged individually.

Note: See also "ALERT LISTS" on page AP-11 for further information.

2.6.1 Alert indication

The alert icon, alert ID, alert name, background icon and number of alerts are displayed when there are active alerts in the background. (However, those items are not displayed in case of only one active alert.) If the alert with the highest priority among background alerts is Warning, the background icon flashes according to the alert with the highest priority.

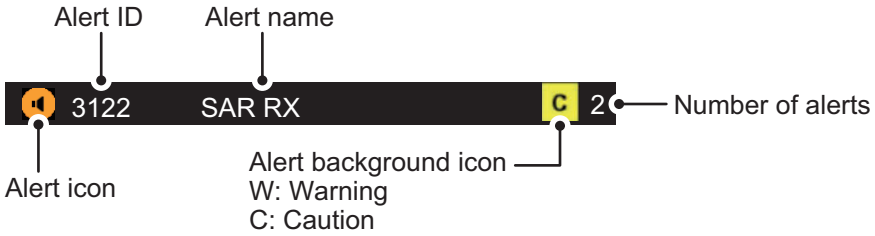

2.6.2 Alert list

Press the **ALERT LIST** key to show the [Active Alerts] window to show the Alert list, which shows all the active alerts. When there are no active alerts, the message "No Active Alerts" is shown at the center of the window.

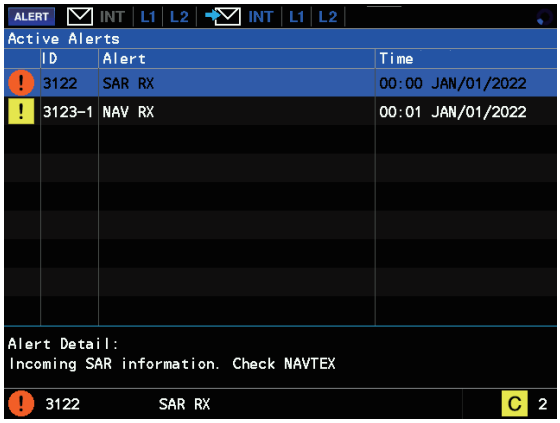

2.6.3 Alert acknowledgment/resolution

When a new warning alert is received, the audible alert beep sounds. Press the **ENT/ACK** key to silence the beep. However, the alert (warning or caution) remains on the screen to be displayed until the cause is resolved and acknowledged. If multiple unread alert messages exist, all the messages need to be confirmed. Carry out the following procedure to confirm and acknowledge all the alert messages.

Note 1: For printer failure alerts, see the alert list on page AP-12.

Note 2: When a SAR message is received, the message content is automatically displayed. After confirmation, press the **ENT/ACK** key to resolve and acknowledge the SAR message. However, if there are other unread SAR messages, follow the procedure below to confirm the message.

1. Press the **MSG/FILTER** key to show list options.
2. Select [Alert Messages] and press the **ENT/ACK** key.

3. Select the unread alert message shown with the envelope icon and press the **ENT/ACK** key. Details of the alert message are shown.
4. Press the ◀▶ keys to check the messages received for other frequencies.

2.7 Receive Mode Settings

The [NAVTEX] menu allows you to select what station to receive, automatically or manually. The Auto mode requires navigation data, and stations are automatically selected according to the distance between own ship and NAVTEX stations. If navigation data is not input, all stations are selected.

For the manual mode, you can select what stations to receive. The [INS] mode allows you to set the station, message and local channel from the external equipment (ex. Integrated Navigation System, using NRM sentence) connected. Note that [Manual] should be chosen if you intend to not use the command from the external equipment.

1. Press the **MENU/ESC** key to open the main menu.
2. Select [NAVTEX] and press the **ENT/ACK** key.
3. Select [Mask Mode] and press the **ENT/ACK** key.

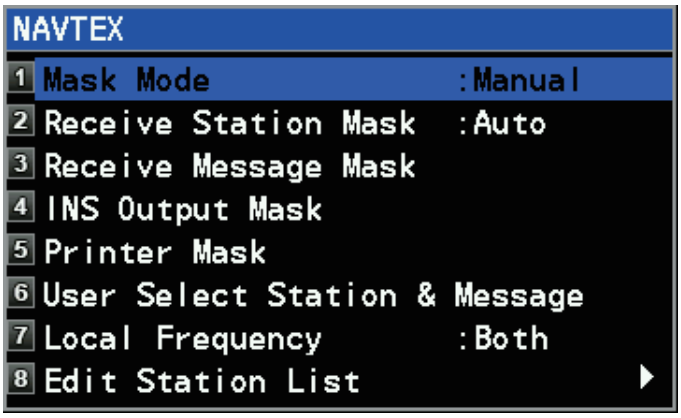

4. Select [INS] or [Manual] as appropriate and press the **ENT/ACK** key.
   Note: When [INS] is selected, [Receive Station Mask] is not shown on the menu.
5. For [Manual] mode, select [Receive Station Mask] and select [Auto] or [Manual] as desired and then press the **ENT/ACK** key.
   - [Auto]: The receiving station filter is automatic.
   - [Manual]: The receiving station filter is manual (see section 2.10 for the station list).
6. Press the **MENU/ESC** key to close the menu.

2.8 Station and Message Settings

1. Press the **MENU/ESC** key to open the main menu.
2. Select [NAVTEX] and press the **ENT/ACK** key.
3. Select [Receive Message Mask], [INS Output Mask], [Printer Mask] or [User Select Station & Message] and press the **ENT/ACK** key.

Stations and messages for receiving/displaying on each station (message) can be set as below.

[Receive Message Mask]

- Station: You can receive messages by station in [Manual] mode.
- Message: You can choose the messages to receive in [Manual] or [Auto] mode. Note that A/B/D/L cannot be rejected.

[INS Output Mask]

You can choose the stations and messages to output to the external equipment. Note that A/B/D/L cannot be rejected.

[Printer Mask]

Choose the type of message to be print automatically when it is received. Note that A/B/D/L cannot be rejected.

[User Select Station & Message]

You can choose the type of stations and messages to display on [User Selected] display (shown by selecting [User Selected Messages] after pressing the **MSG/FILTER** key.)

Note: See also section 1.3. and section 1.5 for information about message formats and the station list.

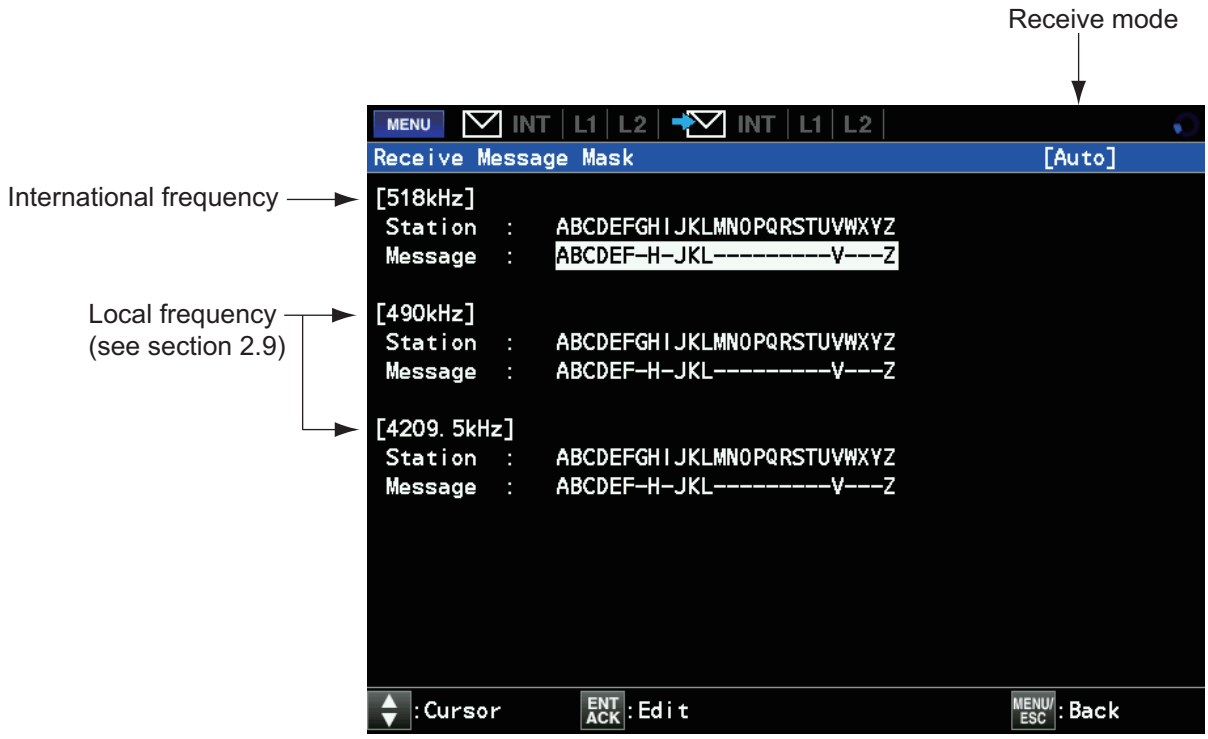

2.9 Frequency Settings

2.9.1 How to select the local frequency

You can choose 490 kHz or 4209.5 kHz as the local frequency.

1. Press the **MENU/ESC** key to open the main menu.
2. Select [NAVTEX] and press the **ENT/ACK** key.
3. Select [Local Frequency] and press the **ENT/ACK** key.
4. Select the desired frequency.
   - [Both]: Receive both 490 kHz and 4209.5 kHz as the local frequency.
   - [490 kHz]: Receive 490 kHz only.
   - [4209.5 kHz]: Receive 4209.5 kHz only.
5. Press the **MENU/ESC** key to close the menu.

2.9.2 How to switch the frequency on the display

On the message list display, you can switch the frequency as 518 kHz, 490 kHz or 4209.5 kHz by pressing ◀ or ▶ key. The current frequency is shown on the top left corner of the display.

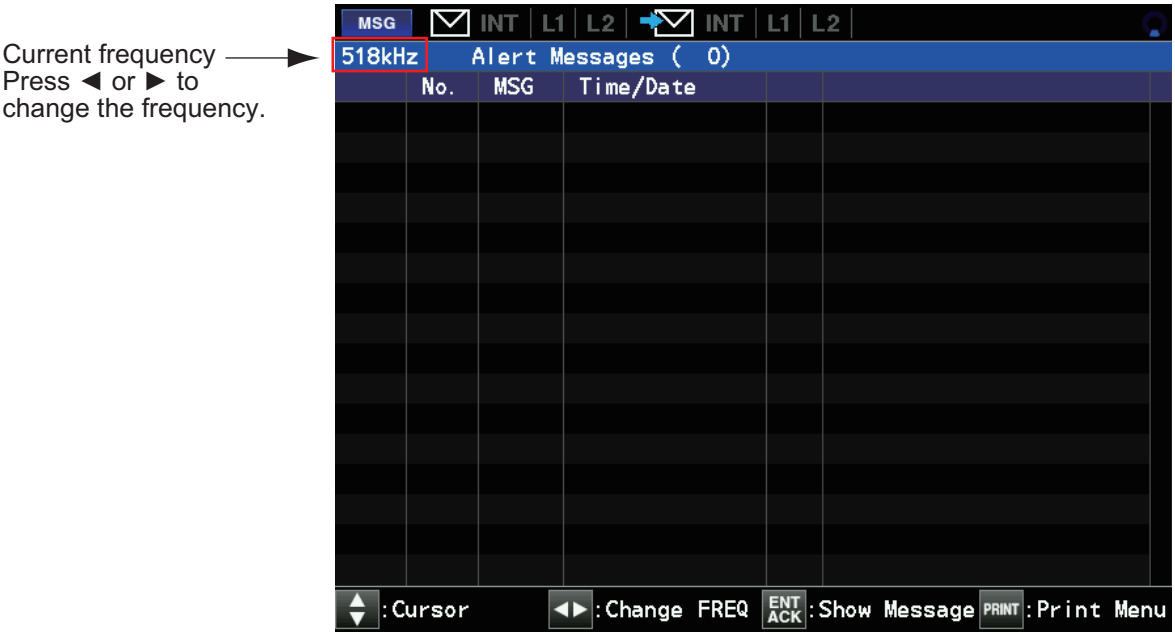

2.10 How to Edit the Station List

A maximum of 300 NAVTEX stations can be registered into the memory for this unit. Carry out the following procedure to edit the station list.

1. Press the **MENU/ESC** key to open the main menu.
2. Select [NAVTEX] and press the **ENT/ACK** key.
3. Select [Edit Station List] and press the **ENT/ACK** key to show the following pop-up window.

4. Select 518 kHz or 490 kHz list to edit as desired and press the **ENT/ACK** key to show the [Edit Station List] display.

How to add a station

1. Select [New] on the [Edit Station List] window and press the **ENT/ACK** key to show the [Add Station] display.

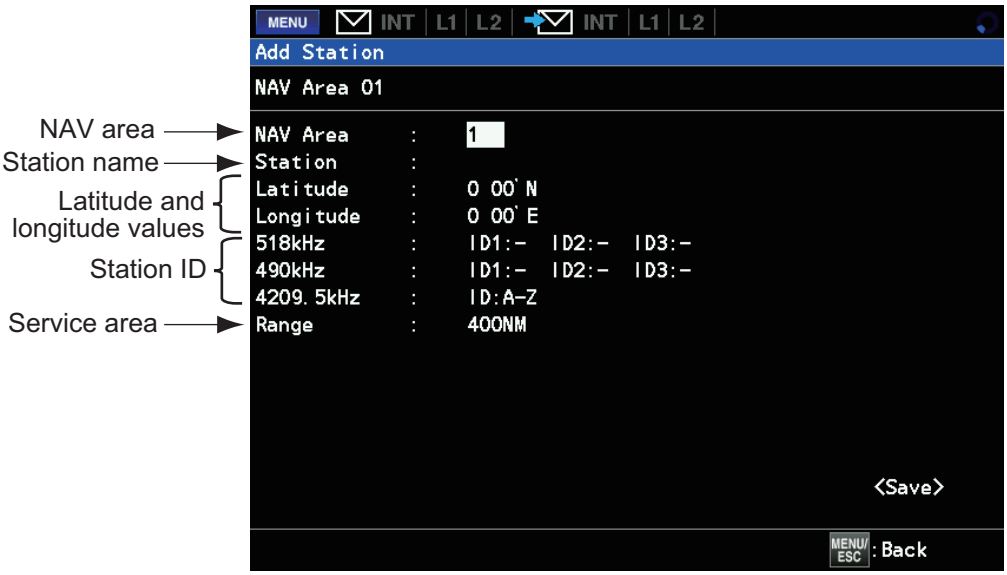

2. Select [Nav Area] and press the **ENT/ACK** key to show the area No. window.

3. Press ▲ or ▼ to choose a Nav area No. (1 to 16, and EXT), and then press the **ENT/ACK** key.
   Note: For Nav area number, see section 1.5.
4. Select [Station] and press the **ENT/ACK** key. Enter a station name (Max. 18 characters), and then press the **ENT/ACK** key.
5. Select [Latitude] and use ▲or▼ to enter the latitude value. Select South ([S]) or North ([N]). Press the **ENT/ACK** key to set.
6. Select [Longitude] and use ▲or▼ to enter the longitude value. You can also switch between East ([E]) and West ([W]). Press the **ENT/ACK** key to set.
7. Select [518kHz] or [490kHz] and press the **ENT/ACK** key. For [518kHz] or [490kHz], enter the station ID (A to Z), and then press the **ENT/ACK** key (for [4209.5kHz] station ID is automatically set and cannot be edited). For multiple stations, fill in ID2 and ID3.
8. Select [Range] and press the **ENT/ACK** key.
9. Enter the service area (1 to 999 NM), and then press the **ENT/ACK** key.
10. Select [<Save>] and press the **ENT/ACK** key. The message “Save new station?” appears.
11. Select “Yes”, and then press the **ENT/ACK** key.
12. Press the **MENU/ESC** key to close the menu.

How to edit a station

1. Select the station to edit on the [Edit Station List] window and press the **ENT/ACK** key to show the following pop-up window.

2. Select [Edit] and press the **ENT/ACK** key to show the [Edit station] window.

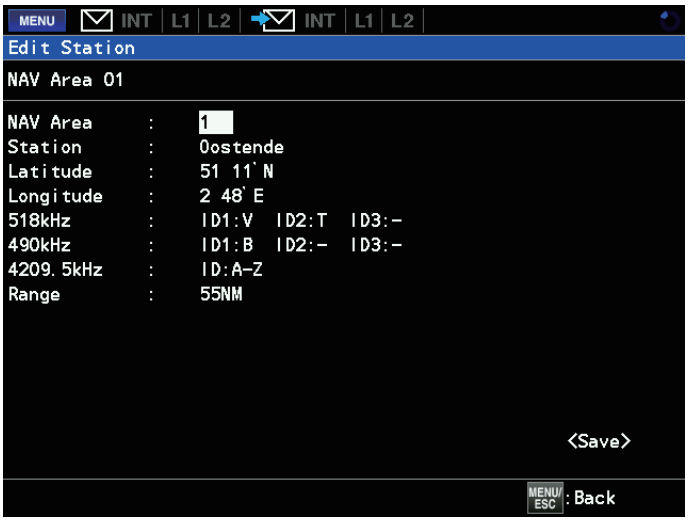

3. Set the NAV area number (see section 1.5).
4. Edit the data as desired (see “Add station” on the previous page for details). Select [<Save>] and press the **ENT/ACK** key. The message “Save new station?” appears.
5. Select “Yes”, and then press the **ENT/ACK** key.
6. Press the **MENU/ESC** key to close the menu.

2.11 [System] Menu

The [System] menu lets you enable/disable audible alerts, apply time offset, and set units of measurement (requires appropriate navigation data).

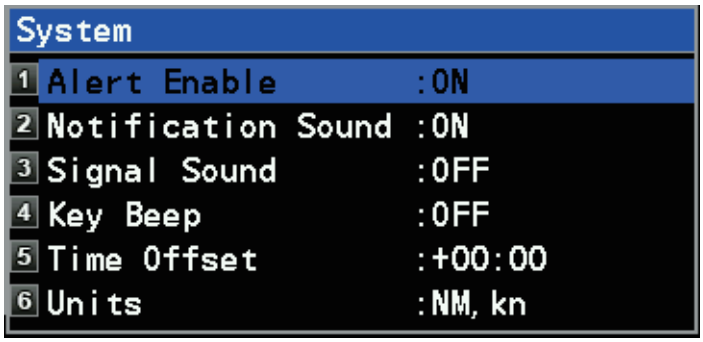

No.	Menu item	Setting	Description
1	[Alert Enable]	ON, OFF	The following alerts can be enabled/disabled: NAV RX, MET RX, PRINTER. **Note:** SAR RX alerts cannot be disabled.
2	[Notification Sound]	ON, OFF	Enable or disable the audible alert given when receiving a warning message (NAV RX, MET RX) or printer failure. **Note 1:** SAR RX alerts cannot be disabled. **Note 2:** Shown on the menu when [Alert Mode] is set to [Legacy] or [Alert IF1] only. [Alert IF2] is set as default.
3	[Signal Sound]	Off, International, Local1, Local2	Set which RX signal frequency type to monitor. • Off: Disables monitoring. • International: Monitors international frequency. • Local1/Local2: Monitors local frequency.
4	[Key Beep]	ON, OFF	Turns key beep on/off.
5	[Time Offset]	-13:30 to +13:30	If a GPS receiver feeds nav data to the NAVTEX, you may use local time instead of UTC time. Enter the time difference between local time and UTC time.
6	[Units]	• NM, kn • km, km/h • SM, mph	Selects units of measurement (distance and ship speed) to be shown.

2.12 [Display] Menu

The [Display] menu lets you adjust the dimmer, contrast, scrolling speed, speed, time, and show or hide the NAV display.

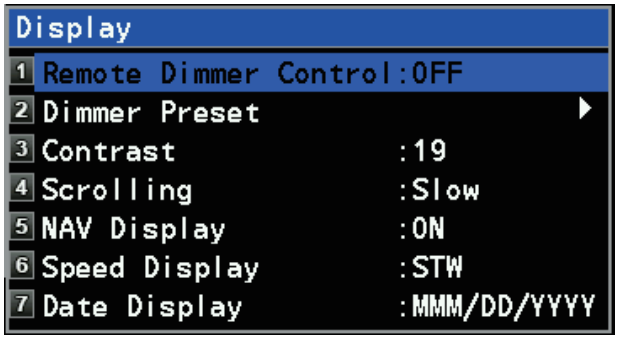

No.	Menu item	Setting	Description
1	[Remote Dimmer Control]	ON, OFF	Select ON to adjust dimmer from external equipment.
2	[Dimmer Preset]	See section 2.4.	See section 2.4.
3	[Contrast]	1 to 19	Set the display contrast value (default: 19).
4	[Scrolling]	Slow, fast, skip to $$	Selects the speed of scrolling by pressing ▲ or ▼ key. • Slow: Scrolls by one line. • Fast: Scrolls by half of screen. • Skip to $$: Skips to the $$ position.
5	[NAV Display]	ON, OFF	Shows the nav display information window on the right side of the display. 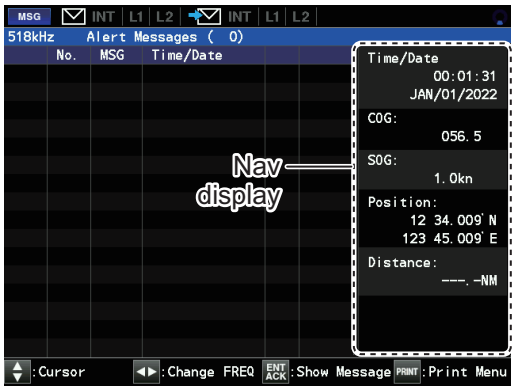 • OFF: Disables NAV display. • ON: Displays Time/Date, COG, SOG, Position and Distance. **Note 1:** If there is no information data when NAV display is set to on, information is shown as "-". **Note 2:** Time/Date is either UTC input from an external device or the time and date of the device's internal RTC.
6	[Speed Display]	SOG, STW	Selects the speed format to display on the NAV display. • SOG: Speed Over the Ground • STW: Speed Through the Water
7	[Date Display]	MMM/DD/YYYY DD/MMM/YYYY YYYY/MM/DD	Selects the date format.

3. MAINTENANCE

⚠ WARNING

Do not open the equipment.

Hazardous voltage which can cause electrical shock exists inside the equipment. Only qualified personnel should work inside the equipment.

NOTICE

Do not apply paint, anti-corrosive sealant or contact spray to coating or plastic parts of the equipment.

Those items contain organic solvents that can damage coating and plastic parts, especially plastic connectors.

3.1 Maintenance

Regular maintenance is important for optimum performance. A maintenance program should be established and should at least include the items shown in the table below.

Item	Check	Action
Connectors	Check for looseness and rust.	• Refasten if necessary. • Remove rust if necessary.
Ground terminal	Check the ground terminal is not loosened or rusty and that the ground wire is properly grounded.	
Antenna	Check the antenna for damage.	Replace the antenna if damaged.
LCD	Check the LCD surface for dust and dirt. **Note 1:** The life of the LCD is approx. 100,000 hours. When the LCD has expired, the brilliance cannot be raised. **Note 2:** The LCD will, in time, accumulate a coating of dust which tends to dim the picture.	Wipe the LCD carefully to prevent scratching, using the cleaning cloth. and an LCD cleaner. To remove dirt or salt deposits, use an LCD cleaner, wiping slowly with cleaning cloth so as to dissolve the dirt or salt. Do not use solvents such as thinner, acetone or benzene for cleaning. Also, do not use degreaser or antifog solution on the LCD, as they can strip the coating on the LCD.
Buzzer	Check the buzzer for dust and dirt.	Dust or dirt may be removed from the buzzer with a soft cloth. Do not user chemical cleaners.

3.2 How to Replace the Fuse

The fuse attached to the power cable of the main unit protects the equipment from overcurrent or reverse polarity. If the fuse blows, find the cause before replacing it. Use the correct fuse. Using the wrong fuse damage the equipment and void the warranty.If the fuse blows again after replacement, contact your dealer for advice.

Name	Type	Code No.
Fuse	FGBO-A 250V 2A PBF	000-155-829-10

⚠ WARNING

Use the proper fuse.

Use of a wrong fuse can result in damage to the equipment or cause fire.

3.3 Troubleshooting

This section provides simple troubleshooting procedures which the user can follow to restore normal operation. If you cannot restore normal operation, do not attempt to check inside the unit. Any trouble should be referred to a qualified technician.

If...	Then...
you cannot turn on the power	• ask serviceman to check for blown fuse. • check that the power cable is connected properly. • check the power supply for proper voltage output.
the equipment receives unwanted messages.	confirm that the Manual mode is chosen
NAVTEX signal cannot be received.	• check equipment by the diagnostic test. • check the broadcasting schedule. • check that the coaxial connector is firmly fastened. • check that the antenna cable is firmly fastened. • check that the printer alert is not activated.
paper does not advance.	load paper correctly.
paper feeds but no recording.	check if correct recording paper is being used.
paper has darkened.	keep the recording paper in a well-ventilated and cool place.
the recording is not proper for the external printer.	• check the printer cable. • check that the power for the printer is turned on. • check that the paper is set properly. • check the setting of the printer on the [Print] menu.

3.4 Self Test

The self test checks the ROM, RAM, serial numbers, circuit board, keys, LCD and antenna for proper operation and displays program numbers.

1. Press the **MENU/ESC** key to open the main menu.
2. Select [Diagnostics] and press the **ENT/ACK** key.
3. Select [Self Test] and press the **ENT/ACK** key.
   The message shown below appears.

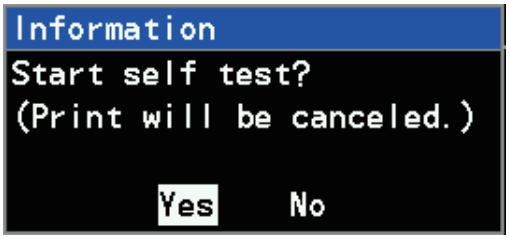

4. Select [Yes] and press the **ENT/ACK** key to do the self test.
   The results are individually displayed as OK or NG (No Good). If any NG is displayed, contact your dealer.

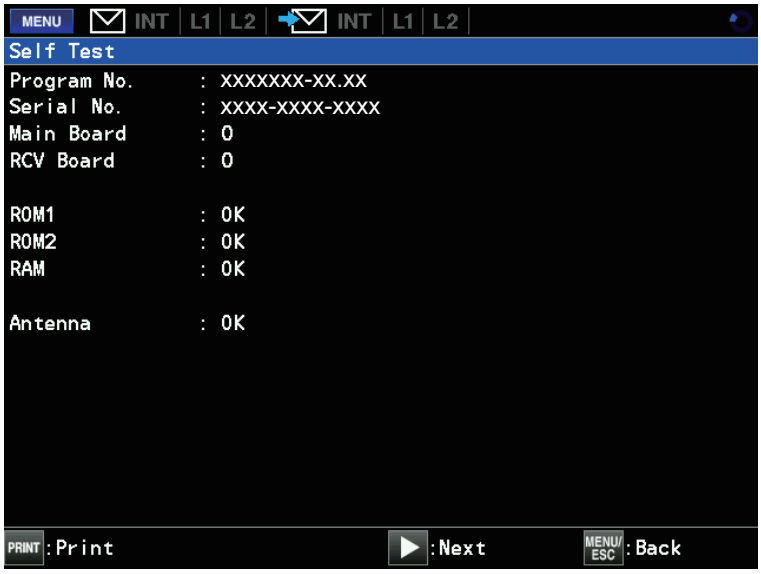

5. Press ▶ to continue to the LCD back light and key back light tests.
   After the test is completed, the current back light values are shown.

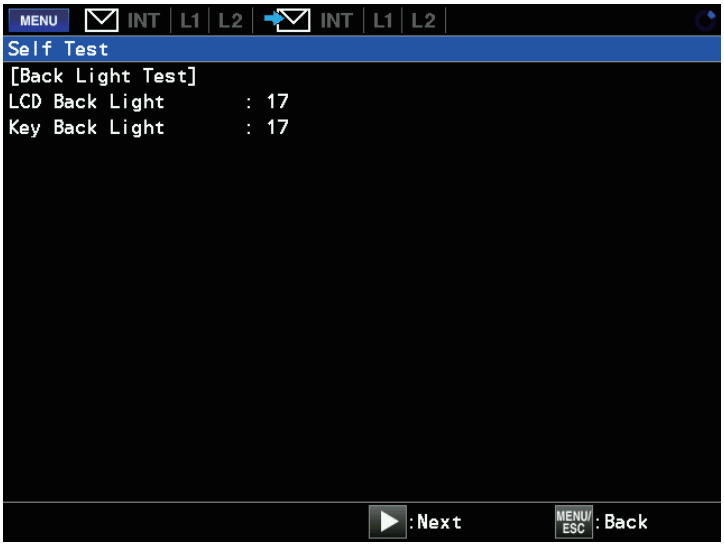

6. Press ▶ to continue to the key test.
   Press each key one by one. A key is functioning properly if its on-screen location turns green when the key is pressed and turns blue when the key is released.

7. After all keys have been tested, press ▶ three times to continue to the LCD test.

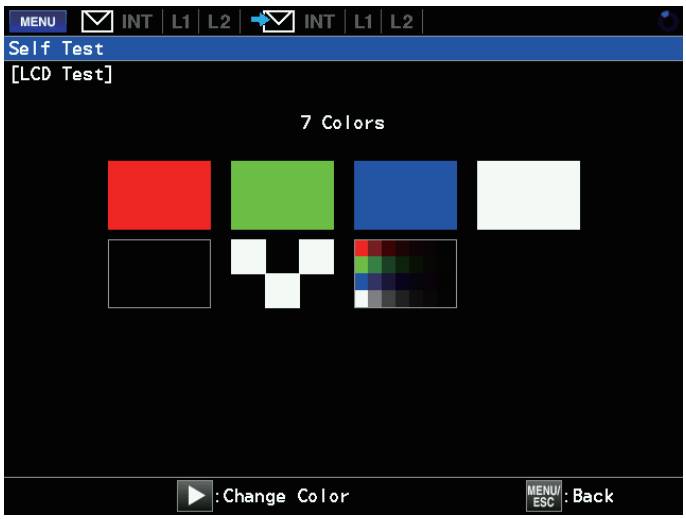

8. Press ▶ to change the color in the order shown above (red→green→blue→white→black→black and white→multicolor). After all seven (7) colors are displayed, the [SAR RX + Alert Buzzer Test] display appears.

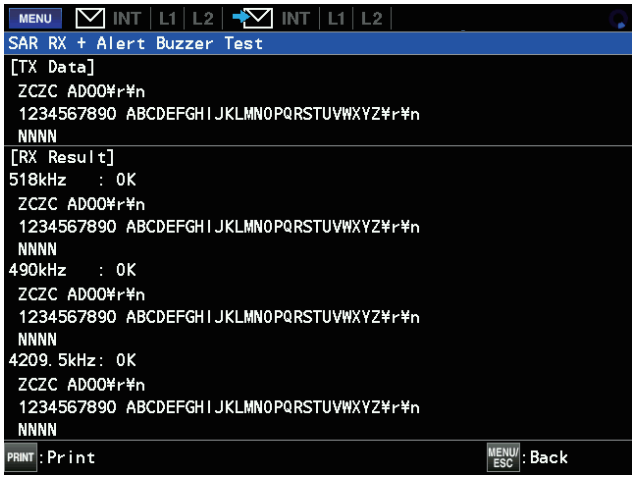

9. To print the test results, check that the connected printer is set to other than [None] and then press the **PRINT** key (see section 4.3 for printer settings).
10. After all the test results are completed, press the **MENU/ESC** key to finish the test.

3.5 How to Restore the Default Settings

Do the following to restore all the default settings.

1. Press the **MENU/ESC** key to open the main menu.
2. Select [Diagnostics] and press the **ENT/ACK** key.

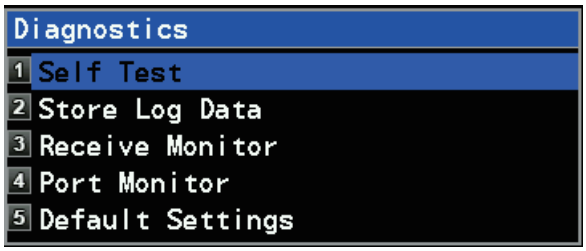

3. Select [Default Settings] and press the **ENT/ACK** key.
   The following message appears.

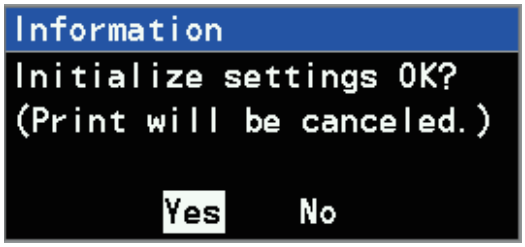

4. Select [Yes] and press the **ENT/ACK** key.
   The system restarts as shown below and all settings are restored.
   Note: Do not turn off the power until the initialization is completed and the system is restarted.

This page is intentionally left blank.

4. INSTALLATION

4.1 Mounting

4.1.1 Main unit

Mounting considerations

The main unit (NX-900) can be installed on a tabletop, on the overhead, or in a panel. Refer to the outline drawings at the back of this manual for the installation instructions.

When selecting a mounting location, keep in mind the following points.

- Locate the unit away from exhaust pipes and vents.
- Locate the unit away from direct sunlight.
- The mounting location should be well ventilated.
- Select a location where shock and vibration are minimal.
- Leave sufficient space for maintenance and service, referring to the outline drawings at the back of this manual.
- A magnetic compass will be affected if the unit is placed too close to the magnetic compass. Observe the compass safe distances at the front of this manual to prevent interference to a magnetic compass.

Tabletop, overhead mounting

The main unit is shipped with a bracket. Follow the steps below to mount the main unit on a desktop or overhead.

Note: For overhead mount, do NOT mount the unit higher than the operator's head.

1. Unfasten the knobs on either side of the main unit and detach the main unit from the bracket.

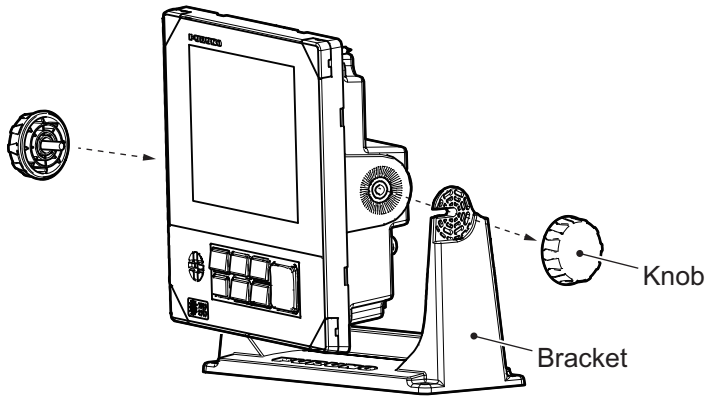

2. Drill four holes for the self-tapping screws in the mounting location. Be sure to follow the recommended maintenance space shown in the outline drawing. Insufficient space may cause damage to connectors when disconnecting and reconnecting them.

3. Fix the bracket to the mounting location with four self-tapping screws (ϕ5×20, supplied). The bracket should be oriented with the insertion slots facing forward.

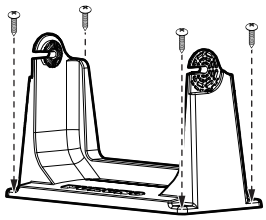

Desktop mount

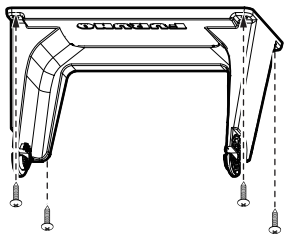

Overhead mount

4. Fit the unit to the bracket and adjust the angle of the unit so that the screen can be viewed clearly.

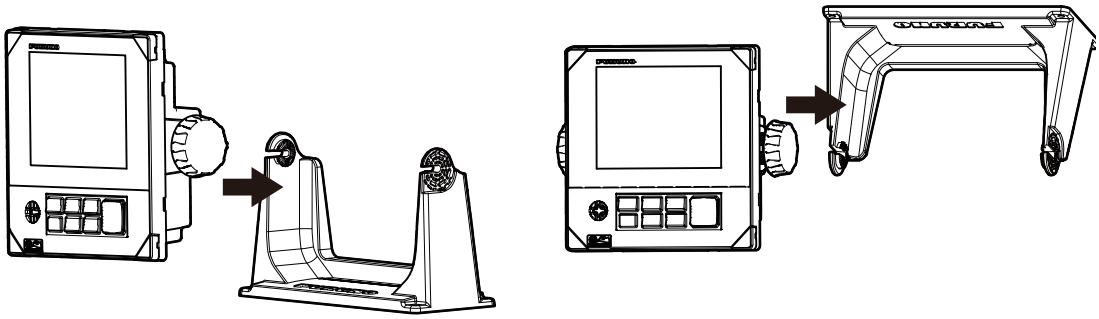

5. Tighten the knobs evenly.

Flush mounting (main unit)

The main unit can be flush mounted in a console or panel.

1. Make a mounting hole in the mounting location and four pilot holes for self-tapping screws, referring to the right-hand figure and to the outline drawing at the back of this manual.
2. Feed the cable through the mounting hole, then connect the cable to the unit.
   Note: Make sure to leave the minimum service space, referring to the outline drawing at the back of this manual.

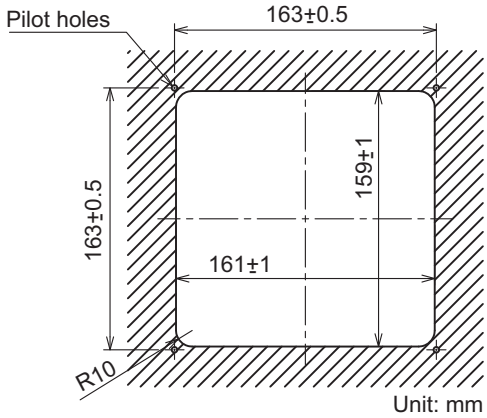

3. Remove four screw caps from the unit.
4. Set the unit to the mounting hole, then secure the unit using four self-tapping screws (ϕ4×20).
5. Reattach four screw caps to the unit.

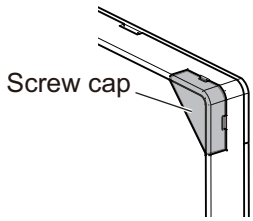

Flush mounting (main unit and printer)

The main unit can also be flush mounted with the optional printer side by side in a console or panel using the optional flush mount kit (model: OP08-22) as shown below.

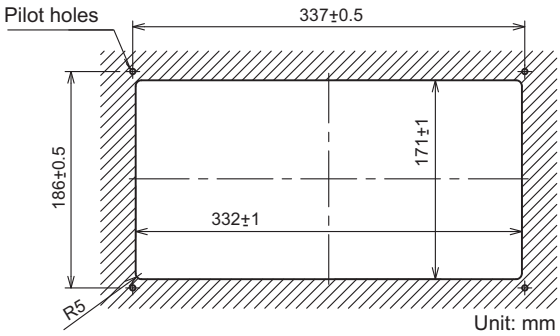

1. Make a mounting hole in the mounting location and four pilot holes for self-tapping screws, referring to the right-hand figure and to the outline drawing at the back of this manual.
2. Attach the flush mount panel to the mounting hole and secure using the four self-tapping screws (ϕ5×20).
3. Feed the cables through the mounting hole, then connect the compatible cables to the main unit and printer.
   Note: Make sure to leave the minimum service space, referring to the outline drawing at the back of this manual.
4. Remove four screw caps from the main unit and printer.
5. Set the main unit and printer side by side to the mounting hole, then secure them using four binding screws (ϕ4×20) for each unit.
6. Reattach four screw caps to the main unit and printer.

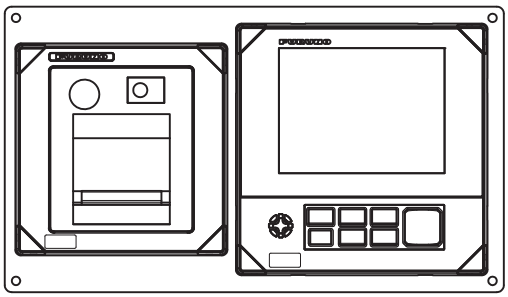

Front side

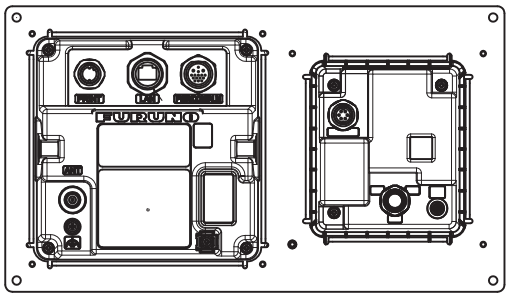

Rear

4.1.2 Junction box (IF-900)

Mounting considerations

When selecting a mounting location, keep in mind the following points.

- Use the specified cable for connecting.
- The power cable is to be supplied locally.
- Turn off the power switch at the switchboard before proceeding with the mounting and wiring.
- For bulkhead installations, secure the unit so that the cable entrance faces downward.
- Leave sufficient space for maintenance and service, referring to the outline drawings at the back of this manual.
- A magnetic compass will be affected if the unit is placed too close to the magnetic compass. Observe the compass safe distances at the front of this manual to prevent interference to a magnetic compass.

Mounting procedure

This unit can be mounted on a desktop or bulkhead. Refer to the outline drawing at the back of this manual for details.

1. Make four pilot holes for self-tapping screws (ϕ4×16, supplied) in the mounting location.
2. Screw two self-tapping screws to the pilot holes, leaving a gap of 5 mm.
3. Hang the unit on the screws and secure the unit by fastening the self-tapping screws.

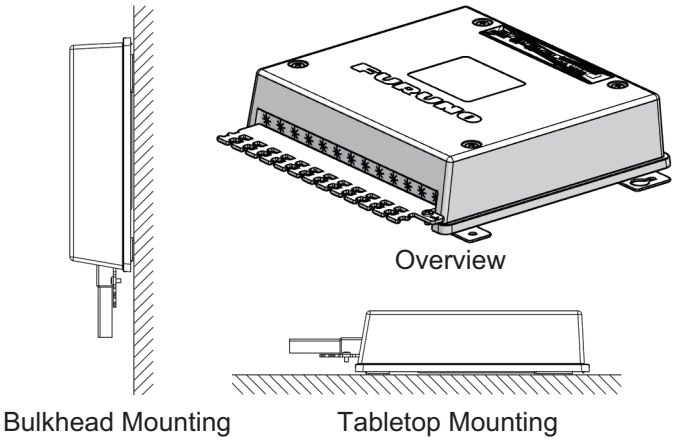

4.1.3 Antenna unit (NX-9HE)

Mounting considerations

Install the antenna unit referring to the antenna installation diagram at the back of this manual.

When selecting a mounting location for the antenna unit, keep in mind the following points:

- Do not shorten the antenna cable.
- Do not install the antenna unit within the beamwidth of the radar.
- Mount the antenna at least 5 m away from the MF/HF transceiver.
- A magnetic compass will be affected if the unit is placed too close to the magnetic compass. Observe the compass safe distances at the front of this manual to prevent interference to a magnetic compass.

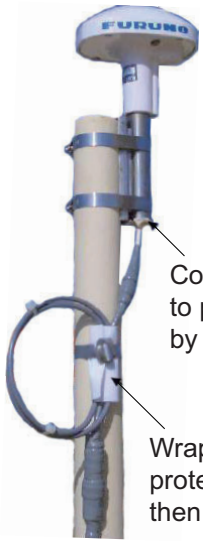

Coat here with silicone sealant to prevent damage to the cable by vibration.

Wrap the cable with a vinyl sheet to protect the cable from damage, and then fix the hose clamp.

4.2 Wiring

4.2.1 Main unit

Connect the equipment, referring to the interconnection diagram at the back of this manual.

Without IF-900

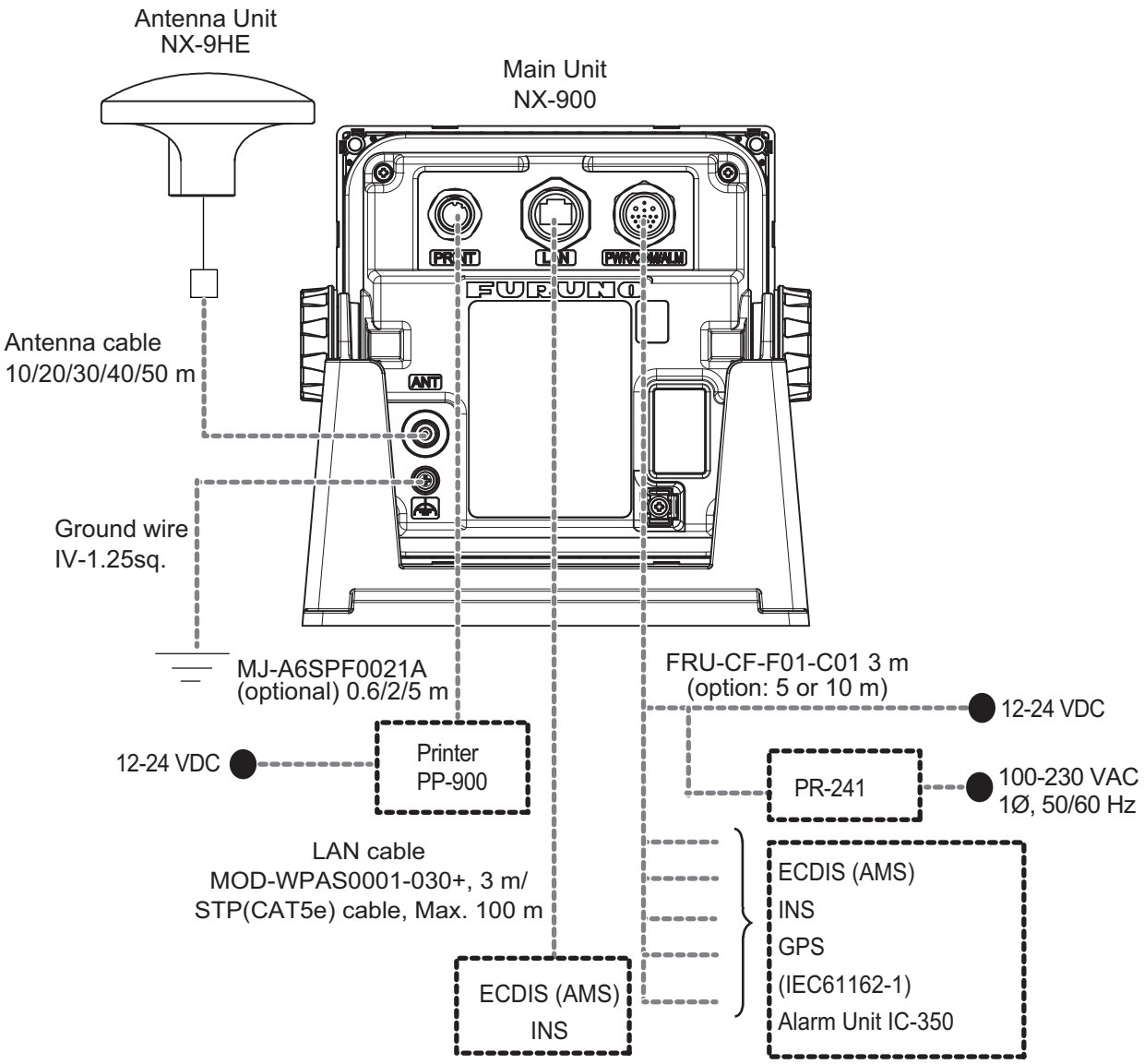

With IF-900

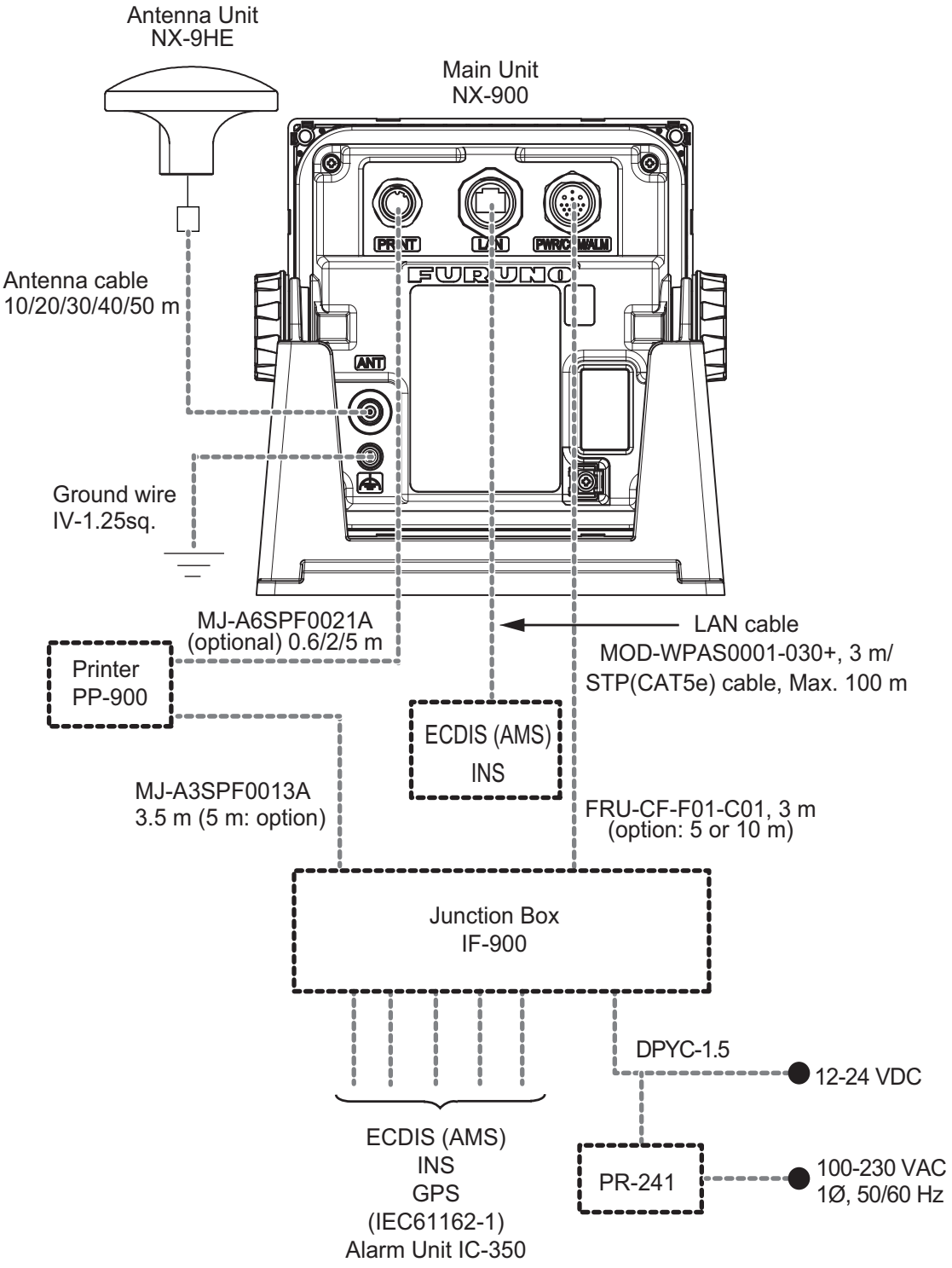
Antenna Unit
NX-9HE
Main Unit
NX-900
PRINT
LAN
PWR/C
WALM
FURUNO
ANT
Antenna cable
10/20/30/40/50 m
Ground wire
IV-1.25sq.
MJ-A6SPF0021A
(optional) 0.6/2/5 m
LAN cable
MOD-WPAS0001-030+, 3 m/
STP(CAT5e) cable, Max. 100 m
Printer
PP-900
ECDIS (AMS)
INS
MJ-A3SPF0013A
3.5 m (5 m: option)
FRU-CF-F01-C01, 3 m
(option: 5 or 10 m)
Junction Box
IF-900
DPYC-1.5
12-24 VDC
ECDIS (AMS)
INS
GPS
(IEC61162-1)
Alarm Unit IC-350
PR-241
100-230 VAC
1Ø, 50/60 Hz

4.2.2 Junction box (IF-900)

Remove the cover from the junction box to access to the plug-in terminal blocks. Fabricate the cables referring to the next page, then connect the cables.

Note: For details about pin assignment of each terminal block, see the interconnection diagram at the back of this manual and the wiring sheet attached to the inside of the cover.

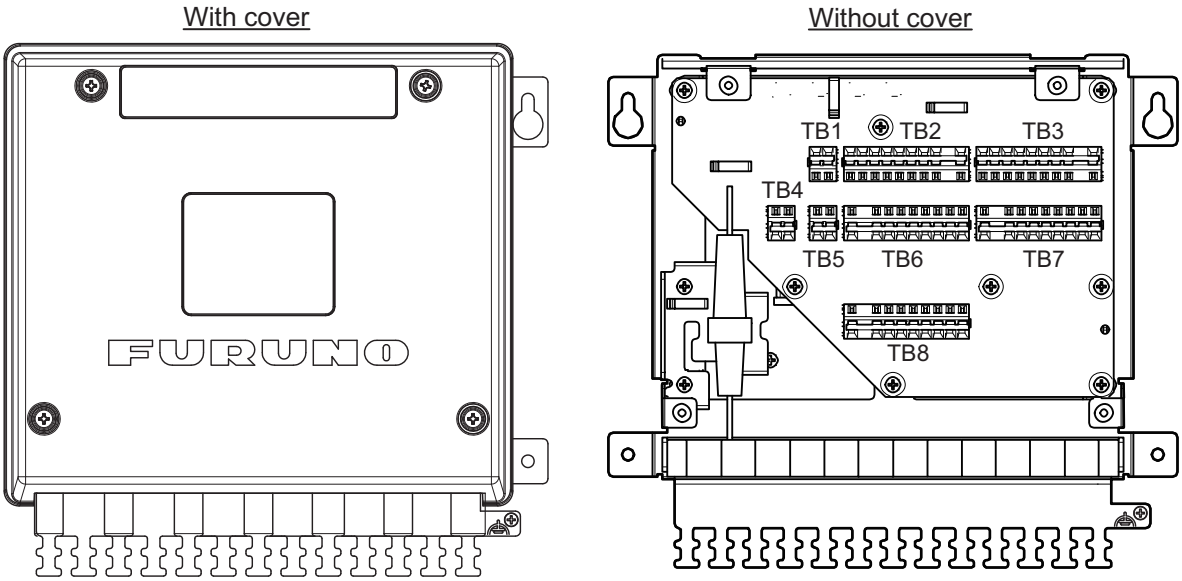

Connect to	Cable from	Cable name
TB1/TB2/TB3	Main unit	Cable assembly
TB4	PP-900	MJ-3 pin cable
TB5	Ship's mains	DPYC-1.5
TB6	ECDIS/AMS	TTYCSLA-1/TTYCSLA-4
TB7	IC-350/GPS	TTYCSLA-1
TB8	ECDIS	TTYCSLA-1

1. Fabricate the cables as shown below to connect the IF-900.

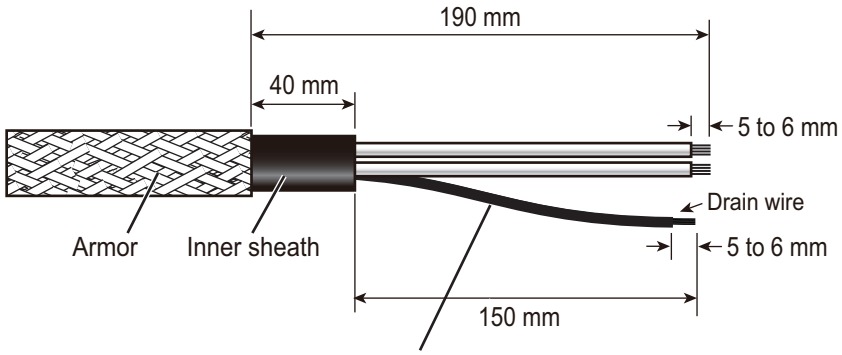

Pass the heat-shrink tube on to the drain wire, then apply heat to the tube.

How to connect wires

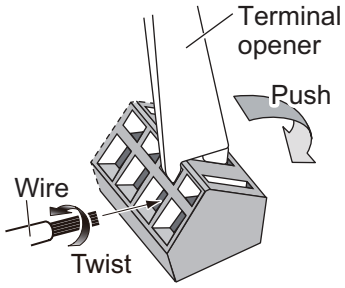

Procedure
1. Twist core.
2. Insert terminal opener and push.
3. Insert wire into hole. Be careful not to pinch the sheath.
4. Release terminal opener.
5. Pull wire to confirm it is correctly inserted.

2. After connecting the cable, secure the cable to the cable clamp using a cable tie.

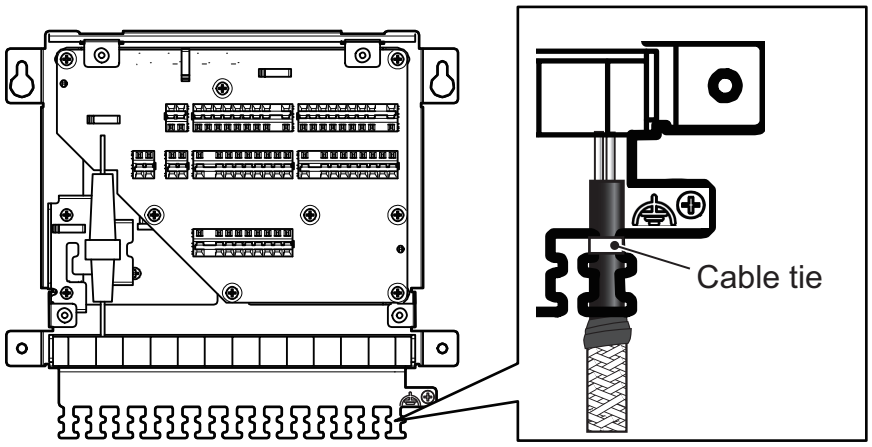

3. Use the cable tie to fix the fuse holder attached to the cable assembly of the main unit. Install the fuse holder so that the protruding part of the fuse holder aligns with the mounting holes.

4. The cable assembly of the main unit is secured with cable clamps (four locations) to show the wiring path backward.

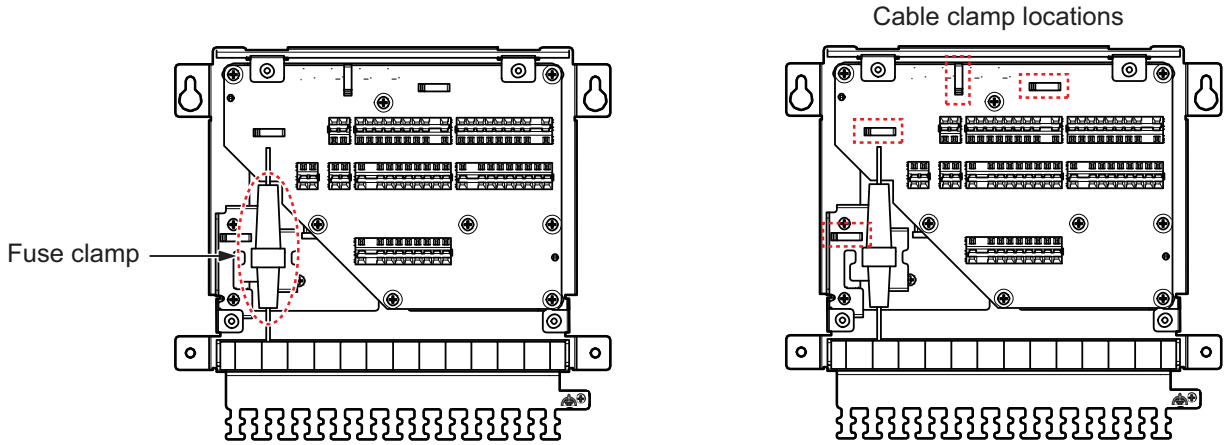

4.2.3 Wiring for RG-10/UY cable

When using the coaxial cable (type: RG-10/UY), attach the GSC-100/MP-7 connector (optional supply) as shown below.

Note: Be sure to leave some slack in the cable for future service and maintenance.

1. Remove the sheath by 30 mm.
2. Bare 23 mm of the center conductor. Trim braided shield by 5 mm and tin.
3. Slide coupling ring onto cable.
4. Screw the plug assembly on the cable.
5. Solder plug assembly to braided shield through solder holes. Solder contact sleeve to conductor.
6. Screw coupling ring into plug assembly.

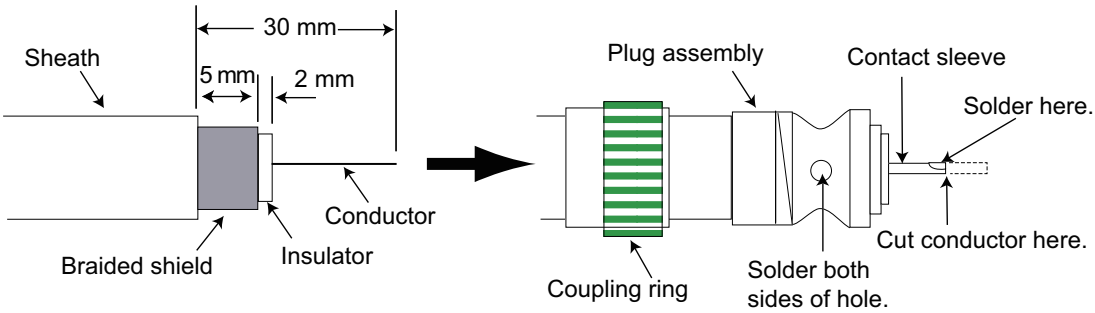

The connector on the main unit and antenna unit is an TNC-type connector, and the connector on the RG-10/UY cable is an M-type connector. Therefore, the coaxial connector exchange cable (TNCP-MJ-3DHR-L01M, optional supply) is required to use the RG-10/UY cable.

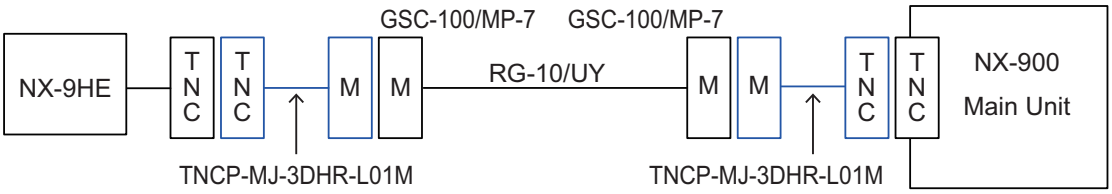

Note: For connecting the coaxial cable to the antenna side coaxial cable, a coaxial connector adapter (TNCP-MJ) can also be used.

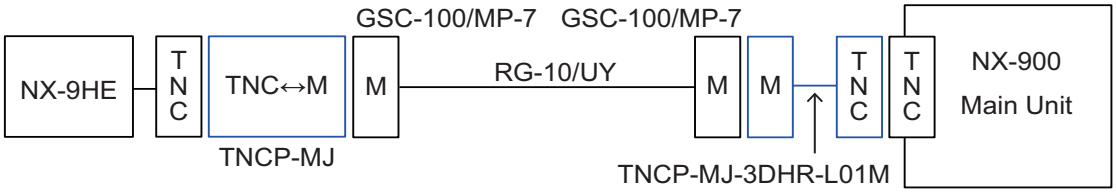

4.2.4 Grounding

To ground the unit, fasten a ground wire (IV-1.25 sq. or larger, supplied locally) between its ground terminal and the ship's ground. The ground wire should be as short as possible.

4.3 Printer Setup

After making all the connections, set up printer for NX-900 as shown below.

1. Press the ⏻/**BRILL** key to turn the power on.
2. Press the **MENU/ESC** key to open the main menu.
3. Select [Print] and press the **ENT/ACK** key.

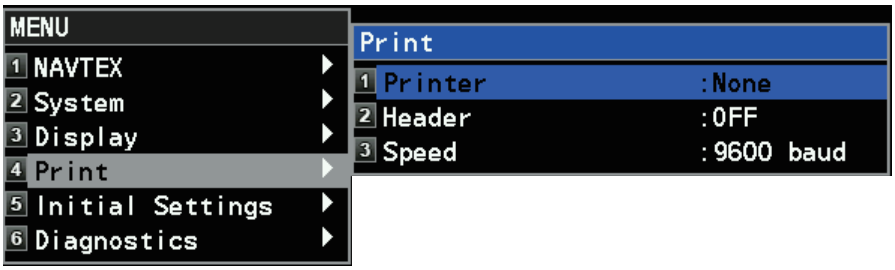

4. Select [Printer] and press the **ENT/ACK** key.
5. Choose the appropriate setting and press the **ENT/ACK** key.

- [None]: When no printer is connected.
- [PP-900]: PP-900 printer (optional supply).
- [Upright]: When NX-900 is connected to an upright-type printer which ejects paper in bottom to top direction.
- [Inverted]: When NX-900 is connected to a bulkhead mount printer which ejects paper in top to bottom direction.
  Note: If a printer alert activates (due to running out of paper, etc.), when the printer is connected and set, NAVTEX messages are not received until the alert is resolved.

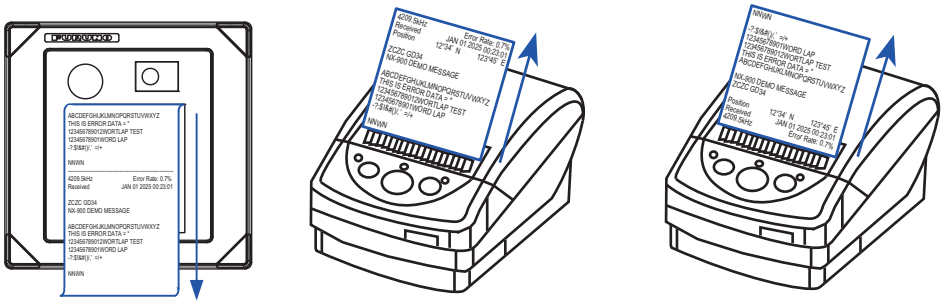

PP-900 | Upright (Bottom to top direction) | Inverted (Top to bottom direction)

6. Select [Header] and press the **ENT/ACK** key. Select [ON] or [OFF] as desired.
   - [ON]: Print out the header with following information.
     - Received date
     - Received frequency
     - Message error rate
     - Position
     - Distance
   - [OFF]: Header is not printed.
7. Select [Speed] and set the baudrate for the printer.
   Note: When [PP-900] or [None] is selected, baudrate is automatically set as 9600 and cannot be adjusted. For printer other than PP-900, set the appropriate baudrate: 4800 baud, 9600 baud, 19200 baud, or 38400 baud.
8. Press the **MENU/ESC** key to close the menu.

4.4 [Initial Settings] Menu

No.	Menu item	Setting	Description
1	[COM Port]	-	Press the **ENT/ACK** key to show the [Com Port] display. Set the baudrate to 4800, 9600, 19200 or 38400 as appropriate. **Note:** Set [Edit] to [Unlock] to adjust the settings.
2	[Network]	-	See subsection 4.4.1 for details.

No.	Menu item	Setting	Description
3	[Management Profile]	Off, On	Press the **ENT/ACK** key to show the [Management Profile] display. Set the Remote Monitoring function on/off as appropriate. **Note:** Set [Edit] to [Unlock] to adjust the settings.
4	[Edit]	Lock, Unlock	Lock or unlock the settings on the [Initial Settings] menu. To unlock, contact a FURUNO agent or your local dealer for service.

4

4.4.1 Network settings

Do as follows to set the network settings (IP address, subnet mask, etc.).

Note: To edit network settings, set [Edit] to [Unlock] on the [Initial Settings] menu.

1. Press the **MENU/ESC** key to open the main menu.
2. Select [Initial Settings] and press the **ENT/ACK** key.
3. Select [Network] and press the **ENT/ACK** key to show the [Network] window.

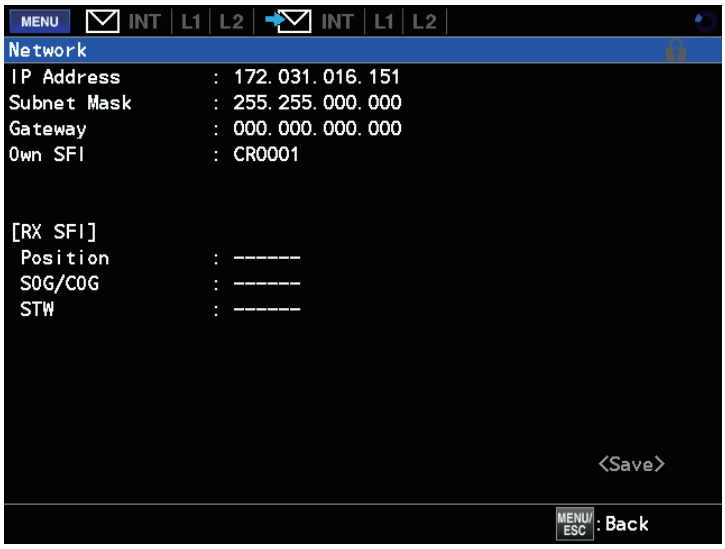

4. Use ▲▼ keys to select the setting to edit.
   - [IP Address]: Unit IP address
   - [Subnet Mask]: Unit subnet mask
   - [Gateway]: Unit gateway

- [Own SFI]: Set the system function ID for the unit (setting range: 0001 to 9998, CR set by system and cannot be adjusted). SFI is used as a identifier to identify devices on the network.
  Note: Be sure that the SFI is not used by other devices in the shipboard network.
- [RX SFI]: Judges if the received sentences as valid if the source SFI and the set value of the NMEA sentences received by LAN450 match.
  - [Position]: Format: GGA/GLL/GNS and RMC sentences.
  - [SOG/COG]: Format: RMC/ VBW and VTG sentences.
  - [STW]: Format: VHW and VBW sentences.
  Note: When the NMEA sentence is not set, the hyphen ‘’------” is shown and no sentences are received from the IEC 61162-450 port.

5. Select [<Save>] and press the **ENT/ACK** key.
   The message window appears.
6. Select [Yes] and press the **ENT/ACK** key.
   The system restarts and settings are saved.

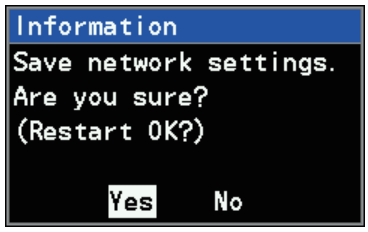

4.5 [Diagnostics] Menu

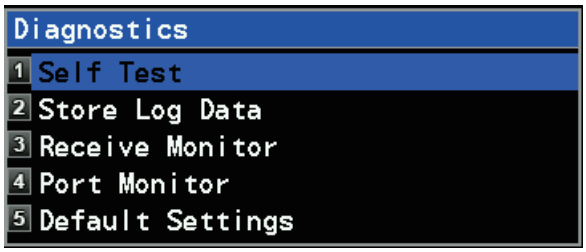

No.	Menu item	Setting	Description
1	[Self Test]	-	See section 3.4 for details.
2	[Store Log Data]	-	Press the **ENT/ACK** key. The confirmation message shown below appears. Select [Yes] and press the **ENT/ACK** key to store log data. 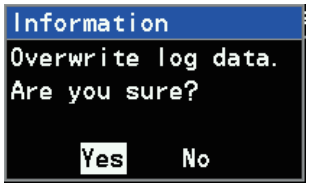
3	[Receive Monitor]	-	Press the **ENT/ACK** key to show the [Receive Monitor Display]. 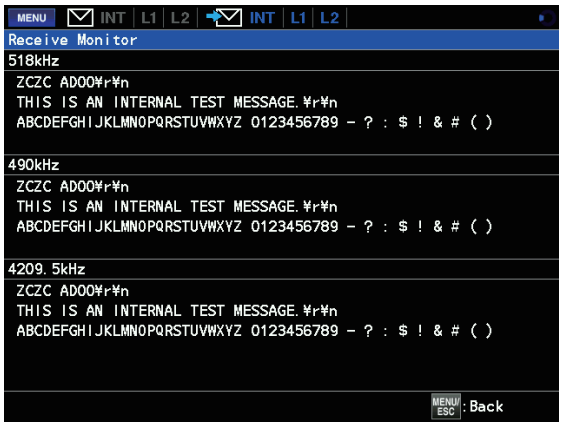

No.	Menu item	Setting	Description
4	[Port Monitor]	COM1, COM2, LAN	Press the **ENT/ACK** key to show the [Port Monitor] display, to see received NAV data sentences. For [Port], select [COM1]/[COM2] or [LAN] as desired and use ◀▶ keys to play and pause the display. **Note:** The network load percentage rate (0%-100%) for the [Port] is displayed in the bar at the upper right side. 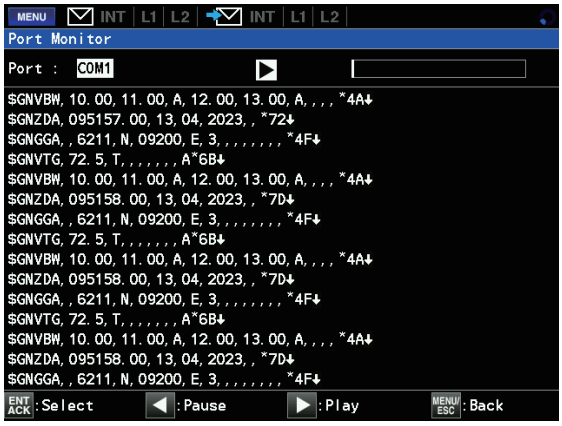
5	[Default Settings]	-	See section 3.5 for details.

4

4.6 [Service] Menu

To access the [Service] menu, contact a FURUNO agent or your local dealer for service.

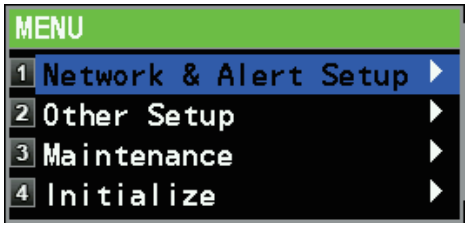

Menus other than the [Network & Alert Setup] menu are not used at installation. Set up the menu items on the [Network & Alert Setup] menu, referring to the following table.

No.	Menu item	Setting	Description
1	[Transmission Group Setup]	-	Press the **ENT/ACK** key to show the [Transmission Group Setup] display to set the IP address and port for [TX Setup], Group for [Rx Setup]. 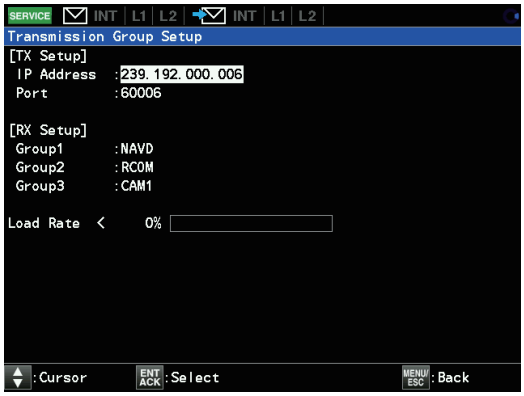

No.	Menu item	Setting	Description
2	[Alert Mode]	Legacy, Alert IF1, Alert IF2	Select the desired alert mode. The “System will restart” confirmation message appears and the unit restarts (default: Alert IF2).
3	[Cluster]	Nav, Com	Select [Nav] or [Com] mode for cluster.

Alert mode

The following functions are different from the [Alert Mode] setting;

Alert Mode	Legacy	Alert IF1	Alert IF2
Alert indication ceasing	The cause of alert is resolved and an acknowledge is received.	The cause of alert is resolved and an acknowledge is received.	The cause of alert is resolved and an acknowledge is received.
Sentence	• Input: ACK • Output: ALR*	• Input: ACK • Output: ALR*	• Input: ACN, HBT • Output: ALC, ALF, ARC, HBT
Alert List	See ‘’For [Legacy/Alert IF1]’’ on page AP-13 for details.		See ‘’For [Alert IF2]’’ on page AP-12 for details.

*: The ALR sentence information output differs when no alerts are generated.

APPX. 1 MENU TREE

Bold Italic: Default

- **MENU/ ESC** key
  - NAVTEX
    - Mask Mode (***Manual***, INS)
    - Receive Station Mask[*1] (***Auto***, Manual)
    - Receive Message Mask[*2, *3] (Station and message selection window appears.)
    - INS Output Mask[*2] (Station and message selection window appears.)
    - Printer Mask[*2, *4] (Station and message selection window appears.)
    - User Select Station & Message (Station and message selection window appears.)
    - Local Frequency (***Both***, 490kHz, 4209. 5kHz)
    - Edit Station List (Edit 518kHz List, Edit 490kHz List)
  - System
    - Alert Enable (OFF, ***ON***)
    - Notification Sound[*5] (OFF, ***ON***)
    - Signal Sound (***OFF***, International, Local1, Local2)
    - Key Beep (OFF, ***ON***)
    - Time Offset (-13:30 to +13:30, ***00:00***)
    - Units (***NM, kn***, km, km/h, SM, mph)
  - Display
    - Remote Dimmer Control (***OFF***, ON)
    - Dimmer Preset (Display: 0 to 19, Panel: 1 to 19)
    - Contrast (1 to ***19***)
    - Scrolling (***Slow***, Fast, Skip to $$)
    - NAV Display (***OFF***, ON)
    - Speed Display (***SOG***, STW)
    - Date Display (***MMM/DD/YYYY***, DD/MMM/YYYY, YYYY/MMM,DD)
  - Print
    - Printer (***None***, PP-900, Upright, Inverted)
    - Header (OFF, ***ON***)
    - Speed (4800 baud, ***9600 baud***, 19200 baud, 38400 baud)
  - Initial Settings
    - COM Port[*6]
      - COM1 [TX] (***4800***, 9600, 19200, 38400 baud)
      - COM1 [RX] (***4800***, 9600, 19200, 38400 baud)
      - COM2 [TX] (***4800***, 9600, 19200, 38400 baud)
      - COM2 [RX] (***4800***, 9600, 19200, 38400 baud)
    - Network[*6]
      - IP Address (000.000.000.000 to 255.255.255.255, ***172.031.016.151***)
      - Subnet Mask (000.000.000.000 to 255.255.255.255, ***255.255.000.000***)
      - Gateway (***000.000.000.000*** to 255.255.255.255)
      - Own SFI (CR0001 to CR9998, ***CR0001***) [RX SFI]
      - Position (Enter SFI of the data source.)
      - SOG/COG (Enter SFI of the data source.)
      - STW (Enter SFI of the data source.)
    - Management Profile[*6]
      - Management Profile (***OFF***, ON)
    - Edit (***Lock***, Unlock[*7])
  - Diagnostics
    - Self Test
    - Store Log Data
    - Receive Monitor
    - Port Monitor
    - Default Settings

[*1]: Shown when [Mask Mode] is set to [Manual].
[*2]: Settings cannot be changed when [Mask Mode] is set to [INS].
[*3]: Settings cannot be changed when [Receive Station Mask] is set to [Auto].
[*4]: Shown when [Printer] is set to [PP-900], [Upright], or [Inverted].
[*5]: Shown when [Alert Mode] is set to [Legacy], or [Alert IF1].

[*6]: Set [Edit] to [Unlock] to adjust the settings.
[*7]: To unlock, contact a FURUNO agent or your local dealer for service.

APPX. 2 DIGITAL INTERFACE

This equipment can input/output navigation data in IEC61162-1 and IEC61162-450 formats.

Sentence data

Input sentences:
ACK, ACN, CRQ, DDC, GGA, GLL, GNS, HBT, NRM, RMC, SRP*, VBW, VHW, VTG, ZDA

Output sentences:
ALC, ALF, ALR, ARC, DDC, HBT, NRM, NRX, SRP*, PFEC (pidat).

*: SRP sentence is for IEC61162-450 only.

Transmission intervals

Sentence	Interval (sec)	Description
ALC	30 seconds	Output when [Alert Mode] is set as [Alert IF2]. ALC sentence is output when the system is turned on.
ALF	Not applicable	Output when [Alert Mode] is set as [Alert IF2] and when one of the following conditions is met: • When the alert state changes. • When a request is received by ACN.
ALR	30 seconds/ 60 seconds*1	When [Alert Mode] is set as [Legacy] or [AlertIF1] and when one of the following conditions is met: • When the alert state changes. • When the system is turned on.
ARC	Not applicable	Output when [Alert Mode] is set as [Alert IF2] and when ACN command is rejected.
DDC	60 seconds	Output when the system is turned on or when a setting is changed.
HBT	25 seconds	Output when [Alert Mode] is set as [Alert IF2].
NRM	Not applicable	Output into Query sentence when requested.
NRX	Not applicable	Output into NRM*2 when a message is received or when requested.
SRP	Not applicable	Output when the system is turned on/ 1 minute after startup/ 5 minutes after startup or when a request is received.
PFEC (pidat)	Not applicable	Output when the system is turned on.

*1: When [Alert Mode] is set as [Legacy], the interval cycle is 60 seconds for inactive alerts and 30 seconds for active alerts.

*2: NRM function code: Requested by 0.

Load requirements as listener

Isolation: Photo coupler
Input impedance: 480 ohms
Max. Voltage ±15 V
Threshold: 1.1 mA Typical
Electrical isolation: Max. 3750 Vrms.

Output drive capability

Differential driver output
R = 100 ohm 2 V min.

Driver short-circuit current
250 mA max.

Data transmission

Data is transmitted in serial asynchronous form in accordance with the standard of IEC61162-1. The first bit is a start bit and is followed by data bits, least-significant-bit as illustrated below.

The following parameters are used:
Baud rate: 38.4 Kbps /4800 bps
Data bits: 8 (D7 = 0), parity none
Stop bit: 1
IEC61162-1: Edition 5.0 2016-08
IEC61162-450: Edition 2.0 2018-05

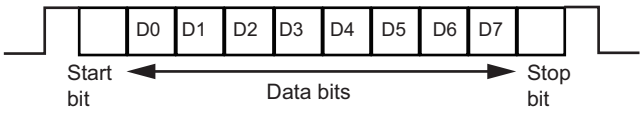

Serial & contact interface I/O circuit

COM1 or 2 port (input)

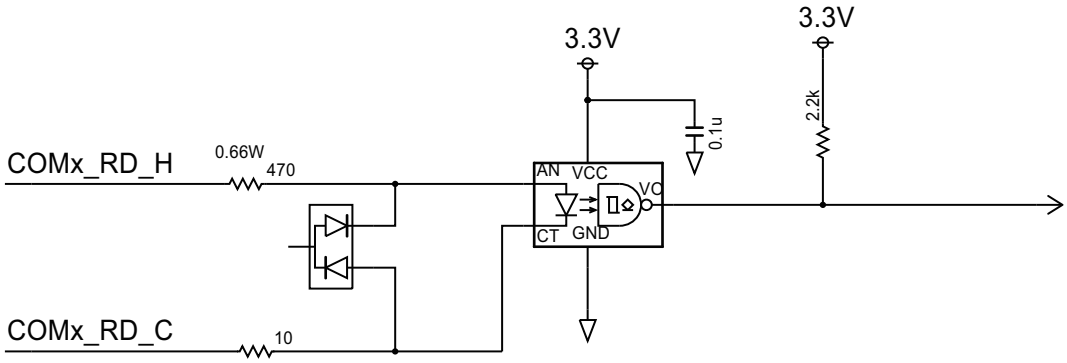

COM1 or 2 port (output)

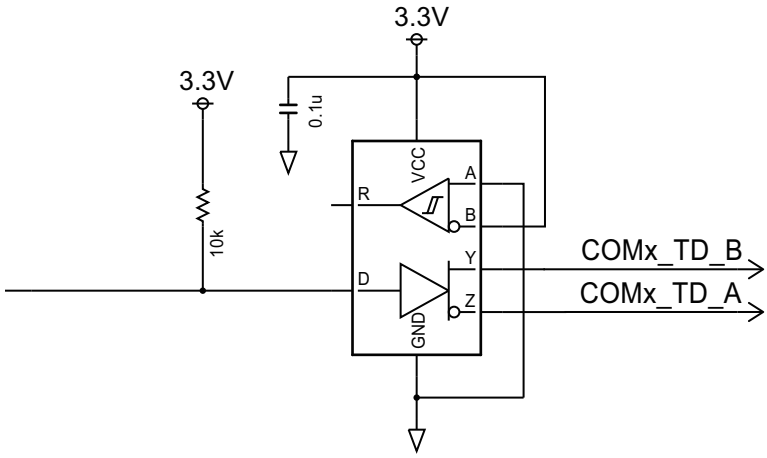

External Alarm

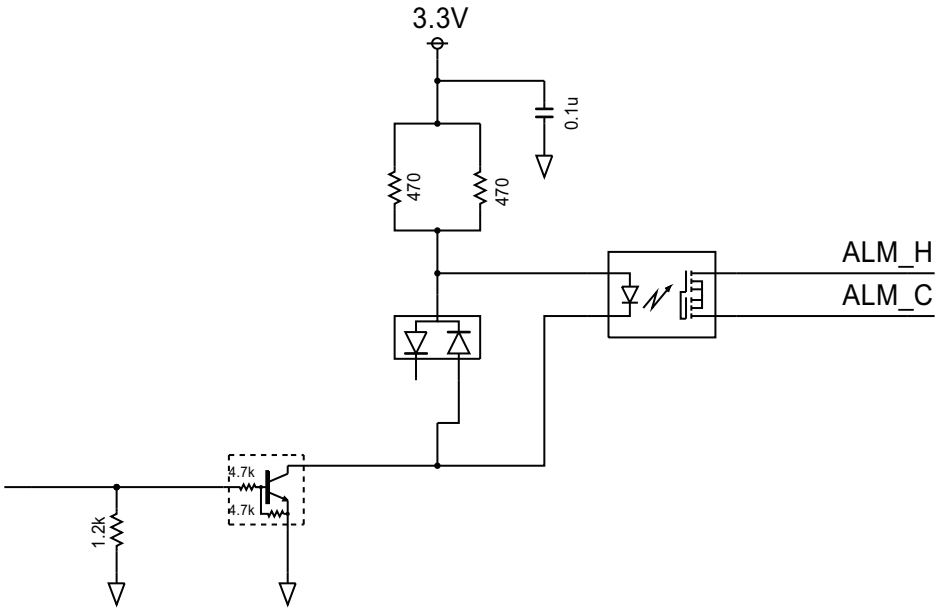

Sentence description

Input sentences

ACK: Acknowledge alarm

```
$**ACK,xxx,*hh<CR><LF>
        1
```

1. Unique alarm number (identifier) at alarm source (001, 002, 003, 051)

ACN: Alert Command

```
$**ACN,hhmmss.ss,aaa,x.x,x.x,c,a*hh<CR><LF>
            1        2   3   4  5 6
```

1. Time (no use)
2. Manufacturer mnemonic code (null)
3. Alert Identifier (0, 3122, 3123, 3079)
4. Alert Instance (0, 1, 2, null)
5. Alert command (A = acknowledge, Q = request/repeat information, O = responsibility transfer, S = silence)
6. Sentence status flag (C = Command)

DDC: Display dimming control

```
$**DDC,a,xx,a,a*hh<CR><LF>
        1 2  3  4
```

1. Display dimming preset (D = Daytime, N = Nighttime, null)
2. Brightness percentage (00 to 99, null)
3. Color palette (no use)
4. Sentences status flag (C = Command)

GGA: Global positioning system (GPS) fix data

```
$**GGA,hhmmss.ss,llll.lll,a,yyyyy.yyy,a,x,xx,x.x,x.x,M,x.x,M,x.x,xxxx,*hh<CR><LF>
            1        2  3       4       5 6 7   8    9  10 11 12 13  14
```

1. UTC of position (no use)
2. Latitude (0000.00000 to 9000.00000)
3. N/S (N, S)
4. Longitude (00000.00000 to 18000.00000)
5. E/W (E, W)
6. GPS quality indicator (1 to 5)
7. Number of satellite in use (no use)
8. Horizontal dilution of precision (no use)
9. Antenna altitude above/below (no use)
10. Units of antenna altitude, m (no use)
11. Geoidal separation (no use)
12. Units of geoidal separation, m (no use)
13. Age of differential GPS data (no use)
14. Differential reference station ID (no use)

GLL: Geographic position – Latitude/longitude

```
$**GLL,llll.ll,a,yyyyy.yy,a,hhmmss.ss,A,a,*hh<CR><LF>
        1   2    3       4       5       6  7
```

1. Latitude (0000.00000 to 9000.00000)
2. N/S (N, S)
3. Longitude (00000.00000 to 18000.00000)
4. E/W (E, W)
5. UTC of position (no use)
6. Status (A = data valid)
7. Mode indicator (A = Autonomous, D = Differential)

GNS: GNSS fix data

```
$**GNS,hhmmss.ss,llll.ll,a,yyyyy.yy,a,c--c,xx,x.x,x.x,x.x,x.x,x.x,a*hh<CR><LF>
                 1          2    3    4     5  6     7   8   9  10  11  12 13
```

1. UTC of position (no use)
2. Latitude (0000.00000 to 9000.00000)
3. N/S (N, S)
4. Longitude (00000.00000 to 18000.00000)
5. E/W (E, W)
6. Mode indicator (N = No fix, A = Autonomous, D = Differential, P = Precise, R = Real Time Kinematic, F = Float RTK, E = Estimated Mode, M = Manual Input Mode, S = Simulator Mode)
7. Total number of satellites in use (no use)
8. HDOP (no use)
9. Antenna altitude, meters (no use)
10. Geoidal separation, meters (no use)
11. Age of differential data (no use)
12. Differential reference station ID (no use)
13. Navigational status indicator (S = Safe, C = Caution, U = Unsafe, V = Navigational status not valid)

HBT: Heartbeat supervision sentence

```
$**HBT,x.x,A,x*hh<CR><LF>
          1  2  3
```

1. Configured repeat interval (1 to 999)
2. Equipment status (A = Normal)
3. Sequential sentence identifier (0 to 9)

NRM: NAVTEX receiver mask

```
$**NRM,x,x,hhhhhhhh,hhhhhhhh,a*hh<CR><LF>
          1 2      3              4        5
```

1. Function code (0 to 3)
2. Frequency table index (1 to 3)
3. Transmitter coverage area mask (00000000 to 03FFFFFF)
4. Message type mask (00000000 to 03FFFFFF)
5. Sentence status flag (C = Command)

RMC: Recommend Minimum Specific GNSS data

```
$**RMC,hhmmss.ss,A,llll.ll,a,yyyyy.yy,a,x.x,x.x,xxxxxx,x.x,a,a,a*hh<CR><LF>
                 1        2  3    4      5       6   7   8        9       10 111213
```

1. UTC of position fix (no use)
2. Status (A=data valid)
3. Latitude (0000.00000 to 9000.0000)
4. N/S (N, S)
5. Longitude (00000.00000 to 18000.0000)
6. E/W (E, W)
7. Speed over ground, knots (0.000 to 999.999)
8. Course over ground, degrees true (0.00 to 360.00)
9. Date (no use)
10. Magnetic variation, degrees E/W (no use)
11. E/W (no use)
12. Mode indicator (A = Autonomous mode, D = Differential mode, F = Float RTK, P = Precise, R = Real time kinematic)
13. Navigational status indication (S = Safe, C = Caution, U = Unsafe, V = Navigational status not valid)

SRP: System function ID resolution protocol

```
$--SRP,x,hhhhhhhhhhhh,c--c*hh<CR><LF>
        1         2            3
```

1. Instance number for interface redundant alternative (null)
2. MAC address (null)
3. IP address (null)

VBW: Dual ground/water speed

```
$**VBW,x.x,x.x,A,x.x,x.x,A,x.x,A,x.x,A,*hh<CR><LF>
          1  2  3  4  5  6 7  8 9  10
```

1. Longitudinal water speed, knots (-999.99 to 999.99)
2. Transverse water speed, knots (-999.99 to 999.99, null)
3. Status: water speed (A = Data valid)
4. Longitudinal ground speed, knots (-999.99 to 999.99)
5. Transverse ground speed, knots (-999.99 to 999.99, null)
6. Status: ground speed (A = Data valid)
7. Stern transverse water speed, knots (no use)
8. Status: stern water speed (no use)
9. Stern transverse ground speed, knots (no use)
10. Status: stern ground speed (no use)

VHW: Water speed and heading

```
$**VHW,x.x,T,x.x,M,x.x,N,x.x,K,*hh <CR><LF>
          1 2  3 4  5  6 7  8
```

1. Heading, degrees (no use)
2. T=True (no use)
3. Heading, degrees (no use)
4. M=Magnetic (no use)
5. Speed, knots (-999.99 to 999.99)
6. N=Knots (fixed)
7. Speed, knots (-999.99 to 999.99)
8. K=km/hr (fixed)

VTG: Course over ground and ground speed

```
$**VTG,x.x,T,x.x,M,x.x,N,x.x,K,a,*hh <CR><LF>
          1 2  3 4  5  6  7 8 9
```

1. Course over ground, degrees (0.00 to 360.00)
2. T=True (fixed)
3. Course over ground, degrees (0.00 to 360.00)
4. M=Magnetic (fixed)
5. Speed over ground, knots (0.00 to 999.99)
6. N=Knots (fixed)
7. Speed over ground (0.00 to 999.99)
8. K=km/h (fixed)
9. Mode indicator (A = Autonomous, D = Differential, P = Precise)

ZDA: Time and date

```
$**ZDA,hhmmss.ss,xx,xx,xxxx,xx,xx,*hh<CR><LF>
              1        2  3   4    5 6
```

1. UTC (hh = 00 to 23, mm = 00 to 59, ss.ss = 00.00 to 59.99)
2. Day (01 to 31)
3. Month (01 to 12)
4. Year (2022 to 2081)
5. Local zone, hours (no use)
6. Local zone, minutes (no use)

Output sentences

ALC: Cyclic alert list

```
$**ALC,xx,xx,xx,x.x, aaa,x.x,x.x,x.x,’’’’’’,*hh<CR><LF>
          1  2   3   4     5    6    7    8    9
```

1. Total number of sentences this message (01 to 03)
2. Sentence number (01 to 03)
3. Sequential message identifier (00 to 99)
4. Number of alert entries (0 to 2)
5. Manufacturer mnemonic code (null)
6. Alert identifier (3122, 3123, 3079)
7. Alert instance (0, 1, 2, null)
8. Revision counter (1 to 99)
9. Additional alert entries (same as 5 to 8)

ALF: Alert sentence

```
$**ALF,x,x,x,hhmmss.ss,a,a,a,aaa,x.x,x.x,x.x,x,c--c,*hh<CR><LF>
         1 2 3        4        5 6 7   8    9  10  11 12 13
```

1. Total number of ALF sentences this message (1, 2)
2. Sentence number (1, 2)
3. Sequential message identifier (0 to 9)
4. Time of last change (hh = 00 to 23, mm = 00 to 59, ss.ss = 00.00 to 59.99, null)
5. Alert category (A = Alert category A, B = Alert category B, null)
6. Alert priority (W = Warning, C = Caution, null)
7. Alert state (A = active-acknowledged or active, S = active-silenced,
   O = active-responsibility transferred, V = active-unacknowledged, N = Normal, null)
8. Manufacturer mnemonic code (null)
9. Alert identifier (3122, 3123, 3079)
10. Alert instance (0, 1, 2, null)
11. Revision counter (1 to 99)
12. Escalation counter (0 to 9)
13. Alert text

ALR: Set alarm state

```
$**ALR,hhmmss.ss,xxx,A,A,c—c,*hh<CR><LF>
                 1        2   3 4    5
```

1. Time of alarm condition change, UTC (hh = 00 to 23, mm = 00 to 59, ss.ss = 00.00 to 59.99, null)
2. Unique alarm number (identifier) at alarm source (001, 002, 003, 006, 051)
3. Alarm condition (A = threshold exceeded, V = not exceeded)
4. Alarm acknowledge state (A = acknowledged, V = not acknowledged)
5. Alarm description text (alphanumeric)

ARC: Alert command refused

```
$**ARC,hhmmss.ss,aaa,x.x,x.x,c*hh<CR><LF>
                 1       2     3   4   5
```

1. Release time of the Alert Command Refused (hh = 00 to 23, mm = 00 to 59, ss.ss = 00.00 to 59.99, null)
2. Used for proprietary alerts, defined by the manufacturer (null)
3. The alert identifier (3122, 3123, 3079)
4. The alert instance (0, 1, 2, null)
5. Refused Alert Command (A = acknowledge, Q = request/repeat information,
   O = active-responsibility transferred, S = silence)

DDC: Display dimming control

```
$**DDC,a,xx,a,a*hh<CR><LF>
        1 2  3  4
```

1. Display dimming preset (D = Daytime, N = Nighttime, null)
2. Brightness percentage (00 to 99)
3. Color palette (null)
4. Sentences status flag (R = Report)

HBT: Heartbeat supervision sentence

```
$**HBT,x.x,A,x*hh<CR><LF>
        1  2  3
```

1. Configured repeat interval (25)
2. Equipment status (A = Normal)
3. Sequential sentence identifier (0 to 9)

NRM: NAVTEX receiver mask

```
$**NRM,x,x,hhhhhhhh,hhhhhhhh,a*hh<CR><LF>
        1 2      3            4        5
```

1. Function code (1 to 3)
2. Frequency table index (1 to 3)
3. Transmitter coverage area mask (00000000 to 03FFFFFF)
4. Message type mask (00000000 to 03FFFFFF)
5. Sentence status flag (R = Report)

NRX: NAVTEX received message

```
$**NRX,xxx,xxx,xx,aaxx,x,hhmmss.ss,xx,xx,xxxx,x.x,x.x, A,c--c,*hh<CR><LF>
        1    2   3   4    5        6        7  8   9    10 11  12 13
```

1. Number of sentences (001 to 500)
2. Sentence number (001 to 500)
3. Sequential message ID (00 to 99)
4. Navtex message code (aaxx (aa: AA to ZZ xx: 00 to 99, null))
5. Frequency table index (1 to 3, null)
6. UTC of receipt of message (hh = 00 to 23, mm = 00 to 59, ss.ss = 00.00 to 59.99, null)
7. Day (1 to 31, null)
8. Month (01 to 12, null)
9. Year (0000 to 9999, null)
10. Total number of characters in this series of NRX sentences (1 to 8000, null)
11. Total number of bad characters (0 to 8000, null)
12. Status indication (A = correct message)
13. Message body (alphanumeric characters)

SRP: System function ID resolution protocol

```
$--SRP,x,hhhhhhhhhhhh,c--c*hh<CR><LF>
        1          2            3
```

1. Instance number for interface redundant alternative (null)
2. MAC address (000000000000 to FFFFFFFFFFFE)
3. IP address 0.0.0.0 to 255.255.255.255)

APPX. 3 JIS CABLE GUIDE

Cables listed in the manual are usually shown as Japanese Industrial Standard (JIS). Use the following guide to locate an equivalent cable locally.

JIS cable names may have up to 6 alphabetical characters, followed by a dash and a numerical value (example: DPYC-2.5).
For core types D and T, the numerical designation indicates the *cross-sectional Area (mm^2)* of the core wire(s) in the cable.
For core types M and TT, the numerical designation indicates the *number of core wires* in the cable.

1. Core Type

D: Double core power line
T: Triple core power line
M: Multi core
TT: Twisted pair communications (1Q=quad cable)

2. Insulation Type

P: Ethylene Propylene Rubber

3. Sheath Type

Y: PVC (Vinyl)

4. Armor Type

C: Steel

5. Sheath Type

Y: Anticorrosive vinyl sheath

6. Shielding Type

SLA: All cores in one shield, plastic tape w/aluminum tape
-SLA: Individually shielded cores, plastic tape w/aluminum tape

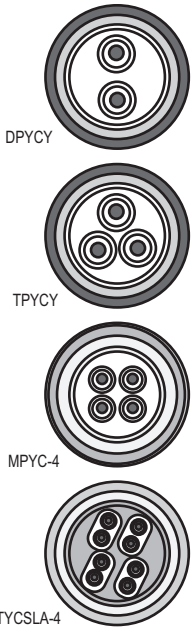

1 3 4 5 6
EX: TTYCYSLA - 4
Designation type — # of twisted pairs

1 2 3 4
MPYC - 4
Designation type — # of cores

The following reference table lists gives the measurements of JIS cables commonly used with Furuno products:

Type	Core Area	Core Diameter	Cable Diameter	Type	Core Area	Core Diameter	Cable Diameter
DPYC-1.5	1.5mm²	1.56mm	11.7mm	TTYCSLA-1	0.75mm²	1.11mm	9.4mm
DPYC-2.5	2.5mm²	2.01mm	12.8mm	TTYCSLA-1T	0.75mm²	1.11mm	10.1mm
DPYC-4	4.0mm²	2.55mm	13.9mm	TTYCSLA-1Q	0.75mm²	1.11mm	10.8mm
DPYC-6	6.0mm²	3.12mm	15.2mm	TTYCSLA-4	0.75mm²	1.11mm	15.7mm
DPYC-10	10.0mm²	4.05mm	17.1mm	TTYCY-1	0.75mm²	1.11mm	11.0mm
DPYCY-1.5	1.5mm²	1.56mm	13.7mm	TTYCY-1T	0.75mm²	1.11mm	11.7mm
DPYCY-2.5	2.5mm²	2.01mm	14.8mm	TTYCY-1Q	0.75mm²	1.11mm	12.6mm
DPYCY-4	4.0mm²	2.55mm	15.9mm	TTYCY-4	0.75mm²	1.11mm	17.7mm
MPYC-2	1.0mm²	1.29mm	10.0mm	TTYCY-4SLA	0.75mm²	1.11mm	19.5mm
MPYC-4	1.0mm²	1.29mm	11.2mm	TTYCYSLA-1	0.75mm²	1.11mm	11.2mm
MPYC-7	1.0mm²	1.29mm	13.2mm	TTYCYSLA-4	0.75mm²	1.11mm	17.9mm
MPYC-12	1.0mm²	1.29mm	16.8mm	TTPYCSLA-1	0.75mm²	1.11mm	9.2mm
TPYC-1.5	1.5mm²	1.56mm	12.5mm	TTPYCSLA-1T	0.75mm²	1.11mm	9.8mm
TPYC-2.5	2.5mm²	2.01mm	13.5mm	TTPYCSLA-1Q	0.75mm²	1.11mm	10.5mm
TPYC-4	4.0mm²	2.55mm	14.7mm	TTPYCSLA-4	0.75mm²	1.11mm	15.3mm
TPYCY-1.5	1.5mm²	1.56mm	14.5mm				
TPYCY-2.5	2.5mm²	2.01mm	15.5mm				
TPYCY-4	4.0mm²	2.55mm	16.9mm				

APPX. 4 ALERT LISTS

The NX-900 displays alerts at the bottom of the screen, as they occur. You can see all alerts from the [ALERT LIST] screen. The contents of the [ALERT LIST] screen differs when selecting [Alert IF2] (set as default) and [Legacy/ Alert IF1]. To use BAM (Bridge Alert Management), set the [Alert Mode] to [Alert IF2]. To change the [Alert Mode] setting, contact a FURUNO agent or your local dealer for service.

The table on the following page shows the alert ID, displayed message, meaning and measures for each alert.

Alert priority and alert category

“Alert” is a generic name for a notice to any unusual or potentially dangerous situation generated within the system.Alerts are classified according to priority and category.

Alert priority

There are three alert priorities: alarm, warning, and caution.

Alarm: Situations or conditions which require immediate attention, decision and (if necessary) action by the bridge team to avoid any kind of hazardous situation and to maintain the safe navigation of the ship.

Warning: Conditions or situations which require immediate attention for precautionary reasons, to make the bridge team aware of conditions which are not immediately hazardous, but may become so.

Caution: Awareness of a condition which continues to require attention out of the ordinary consideration of the situation or of given information.

Alert category

An alert is further classified by category, A, B or C, according to its degree of severity or source.

Category	Description
A	Category A alerts, which must be acknowledged at the unit generating the alert, are as follows: • Danger of collision • Danger of grounding
B	Alert where no additional information for decision support is necessary.
C	Category C alerts are not shown on this equipment.

Note 1: The BAM function type for the NX-900 is “P”.

Note 2: Connection with the Central Alert Management (CAM) is available on COM1 and COM2 or with LAN.

For [Alert IF2]

Alert ID		Displayed message	Sub message	Priority/ Category	Meaning	Measures
3122*3		SAR RX	Incoming SAR information. Check NAVTEX	Warning*1/A	SAR message is received.	Check the message contents. See section 2.6.3.
3123*2		NAV/MET RX	Check member alerts.	Caution/B	Navigational and Meteorological warning messages are received.	Check the message contents. See section 2.6.3.
	3123-1	NAV RX	Incoming NAV warning information. Check NAVTEX.	Caution/B	Navigational warning message is received.	
	3123-2	MET RX	Incoming MET warning information. Check NAVTEX.	Caution/B	Meteorological warning message is received.	
3079		PRINTER	Printer failure.	Caution/B	Printer error (no paper, not connected to the printer etc.).	• Check if the recording paper has run out. • Check if the printer and the main unit are firmly connected. See section 3.3.

*1: When the priority is Warning, the alert buzzer sounds in 4 min. 50 s. cycles.

*2: This alert is aggregated.

*3: The temporary silence is allowed by inputting ACN sentence.

Note: This system does not have the following functions: Functional alert group.

For [Legacy/Alert IF1]

Alert ID	Displayed message	Sub message	Priority/ Category	Meaning	Measures
001	NAV RX	Navigational warning	Warning*1 /A	Navigational warning message is received.	Check the message contents. See section 2.6.3.
002	MET RX	Meteorological warning	Warning*1 /A	Meteorological warning message is received.	Check the message contents. See section 2.6.3.
003	SAR RX	Search and rescue information	Warning*1 /A	SAR message is received.	Check the message contents. See section 2.6.3.
051	PRINTER	Printer failure	Warning*1 /A	Printer error (no paper, not connected to the printer etc.).	- Check if the recording paper has run out. See section 3.2 for how to replace the paper. -Check if the printer and the main unit are firmly connected. See section 3.3.

*1: When the priority is Warning, the alert buzzer sounds in 4 min. 50 s. cycles.

Alert Icons

Each active alert entry is accompanied by an alert icon, indicating the state of the alert. The alert icons displayed on the NX-900 are listed in the table below with a brief description.

Icon	Description	Priority
	Active-unacknowledged warning Notification, icon is flashing*	Warning
	Active-silenced notification, icon is flashing.*	
	Rectified-unacknowledged notification, icon is flashing.*	
	Active-responsibility transferred notification, icon is lit steadily.	
	Active-acknowledged notification, icon is lit steadily.	
	Active, icon is lit steadily.	Caution

*: Flashing at 0.5 second intervals.

APPX. 5 ABBREVIATIONS

Abbreviation	Meaning
ACK	Acknowledge
AMS	Alert Management System
APR	April
AUG	August
BAM	Bridge Alert Management
BRILL	Brilliance
CAM	Central Alert Management
COG	Course Over Ground
COM	Communication
DEC	December
E	East
ECDIS	Electronic Chart Display and Information System
ENT	Enter
ESC	Escape
EXT	Extension
FEB	February
FREQ	Frequency
ID	Identification
IF	Interface
INS	Integrated Navigation System
INT	International
int'l	international
IP	Internet Protocol
JAN	January
JUL	July
JUN	June
km	Kilometer
km/h	Kilometers per hour
kn	Knot
LAN	Local Area Network
LCD	Liquid Crystal Display
L/L	Latitude/Longitude
MAR	March
MET	Meteorological
mph	Miles per hour
MSG	Message
N	North
NAV	Navigation
NAVTEX	Navigational Telex
NM	Nautical Mile
NMEA	National Marine Electronics Association
NO.	Number
NOV	November
OCT	October
OFF	Off

Abbreviation	Meaning
ON	On
RAM	Random Access Memory
RCV	Receive
ROM	Read Only Memory
RX	Receiver
S	South
s	Second
SAR	Search and Rescue
sec	second
SEP	September
SFI	System Function ID
SM	Statute Mile
SOG	Speed Over Ground
STW	Speed Through Water
TIME	Time
TX	Transmitter
UTC	Coordinated Universal Time
W	West

APPX. 6 PARTS LOCATION

Main Unit (NX-900)

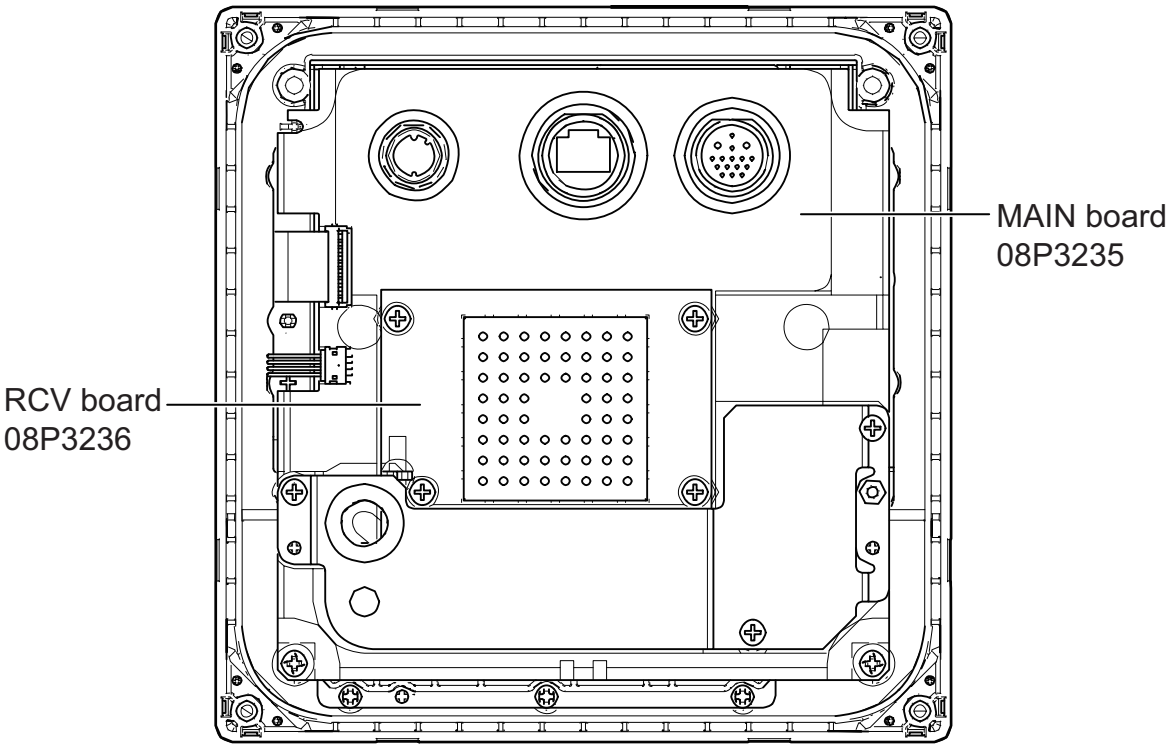

Junction Box (IF-900)

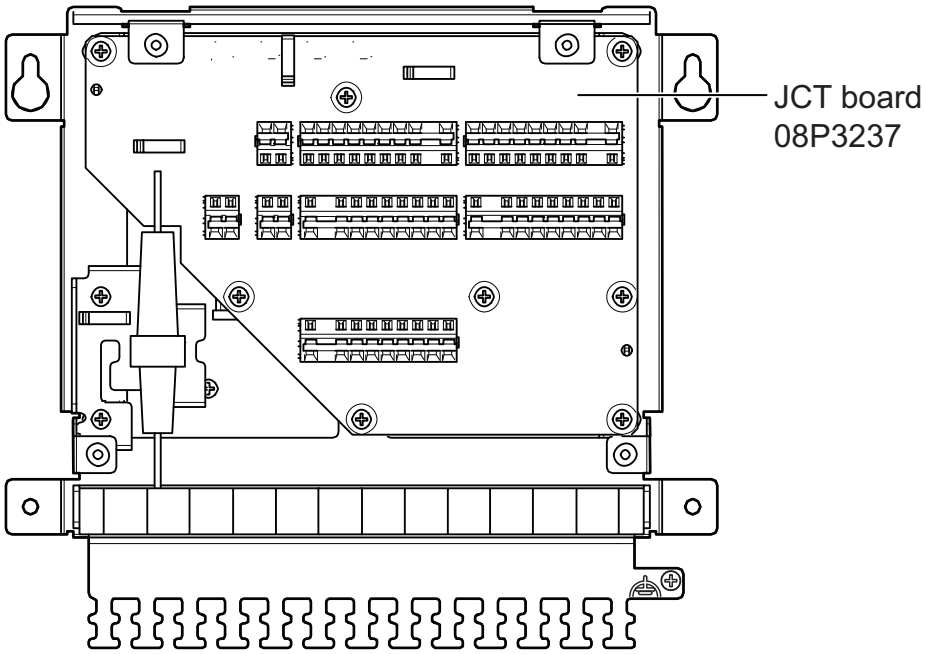

APPX. 7 TERM OF USE FOR OPEN SOURCE SOFTWARE

This product includes software to be licensed under BSD, MIT and others. For details about the term of use for these software, see the following descriptions:

・SoC Embedded Design Suite (SoC EDS)

Copyright (C) 2018 Intel Corporation. All rights reserved.

SPDX-License-Identifier: BSD-3-Clause

Redistribution and use in source and binary forms, with or without modification, are permitted provided that the following conditions are met:
* Redistributions of source code must retain the above copyright notice, this list of conditions and the following disclaimer.
* Redistributions in binary form must reproduce the above copyright notice, this list of conditions and the following disclaimer in the documentation and/or other materials provided with the distribution.
* Neither the name of Intel Corporation nor the names of its contributors may be used to endorse or promote products derived from this software without specific prior written permission.

THIS SOFTWARE IS PROVIDED BY THE COPYRIGHT HOLDERS AND CONTRIBUTORS "AS IS" AND ANY EXPRESS OR IMPLIED WARRANTIES, INCLUDING, BUT NOT LIMITED TO, THE IMPLIED WARRANTIES OF MERCHANTABILITY AND FITNESS FOR A PARTICULAR PURPOSE ARE DISCLAIMED. IN NO EVENT SHALL ALTERA CORPORATION BE LIABLE FOR ANY DIRECT, INDIRECT, INCIDENTAL, SPECIAL, EXEMPLARY, OR CONSEQUENTIAL DAMAGES (INCLUDING, BUT NOT LIMITED TO, PROCUREMENT OF SUBSTITUTE GOODS OR SERVICES; LOSS OF USE, DATA, OR PROFITS; OR BUSINESS INTERRUPTION) HOWEVER CAUSED AND ON ANY THEORY OF LIABILITY, WHETHER IN CONTRACT, STRICT LIABILITY, OR TORT (INCLUDING NEGLIGENCE OR OTHERWISE) ARISING IN ANY WAY OUT OF THE USE OF THIS SOFTWARE, EVEN IF ADVISED OF THE POSSIBILITY OF SUCH DAMAGE.

October 2008, Bo Berry
Modified 2012, Jonathan Toppins <jtoppins@users.sourceforge.net>

Copyright (c) 2008-2013 by Cisco Systems, Inc All rights reserved.

Permission is hereby granted, free of charge, to any person obtaining a copy of this software and associated documentation files (the "Software"), to deal in the Software without restriction, including without limitation the rights to use, copy, modify, merge, publish, distribute, sublicense, and/or sell copies of the Software, and to permit persons to whom the Software is furnished to do so, subject to the following conditions:

The above copyright notice and this permission notice shall be included in all copies or substantial portions of the Software.

THE SOFTWARE IS PROVIDED "AS IS", WITHOUT WARRANTY OF ANY KIND, EXPRESS OR IMPLIED, INCLUDING BUT NOT LIMITED TO THE WARRANTIES OF MERCHANTABILITY, FITNESS FOR A PARTICULAR PURPOSE AND NONINFRINGEMENT. IN NO EVENT SHALL THE AUTHORS OR COPYRIGHT HOLDERS BE LIABLE FOR ANY CLAIM, DAMAGES OR OTHER LIABILITY, WHETHER IN AN ACTION OF CONTRACT, TORT OR OTHERWISE, ARISING FROM, OUT OF OR IN CONNECTION WITH THE SOFTWARE OR THE USE OR OTHER DEALINGS IN THE SOFTWARE.

・newlib

(1) Red Hat Incorporated

Copyright (c) 1994-2009 Red Hat, Inc. All rights reserved.

This copyrighted material is made available to anyone wishing to use, modify, copy, or redistribute it subject to the terms and conditions of the BSD License. This program is distributed in the hope that it will be useful, but WITHOUT ANY WARRANTY expressed or implied, including the implied warranties of MERCHANTABILITY or FITNESS FOR A PARTICULAR PURPOSE. A copy of this license is available at http://www.opensource.org/licenses. Any Red Hat trademarks that are incorporated in the source code or documentation are not subject to the BSD License and may only be used or replicated with the express permission of Red Hat, Inc.

(2) University of California, Berkeley

Copyright (c) 1981-2000 The Regents of the University of California.
All rights reserved.

Redistribution and use in source and binary forms, with or without modification, are permitted provided that the following conditions are met:

* Redistributions of source code must retain the above copyright notice, this list of conditions and the following disclaimer.
* Redistributions in binary form must reproduce the above copyright notice, this list of conditions and the following disclaimer in the documentation and/or other materials provided with the distribution.
* Neither the name of the University nor the names of its contributors may be used to endorse or promote products derived from this software without specific prior written permission.

THIS SOFTWARE IS PROVIDED BY THE COPYRIGHT HOLDERS AND CONTRIBUTORS "AS IS" AND ANY EXPRESS OR IMPLIED WARRANTIES, INCLUDING, BUT NOT LIMITED TO, THE IMPLIED WARRANTIES OF MERCHANTABILITY AND FITNESS FOR A PARTICULAR PURPOSE ARE DISCLAIMED. IN NO EVENT SHALL THE COPYRIGHT OWNER OR CONTRIBUTORS BE LIABLE FOR ANY DIRECT, INDIRECT, INCIDENTAL, SPECIAL, EXEMPLARY, OR CONSEQUENTIAL DAMAGES (INCLUDING, BUT NOT LIMITED TO, PROCUREMENT OF SUBSTITUTE GOODS OR SERVICES; LOSS OF USE, DATA, OR PROFITS; OR BUSINESS INTERRUPTION) HOWEVER CAUSED AND ON ANY THEORY OF LIABILITY, WHETHER IN CONTRACT, STRICT LIABILITY, OR TORT (INCLUDING NEGLIGENCE OR OTHERWISE) ARISING IN ANY WAY OUT OF THE USE OF THIS SOFTWARE, EVEN IF ADVISED OF THE POSSIBILITY OF SUCH DAMAGE.

(3) David M. Gay (AT&T 1991, Lucent 1998)

The author of this software is David M. Gay.

Copyright (c) 1991 by AT&T.

Permission to use, copy, modify, and distribute this software for any purpose without fee is hereby granted, provided that this entire notice is included in all copies of any software which is or includes a copy or modification of this software and in all copies of the supporting documentation for such software.

THIS SOFTWARE IS BEING PROVIDED "AS IS", WITHOUT ANY EXPRESS OR IMPLIED WARRANTY. IN PARTICULAR, NEITHER THE AUTHOR NOR AT&T MAKES ANY REPRESENTATION OR WARRANTY OF ANY KIND CONCERNING THE MERCHANTABILITY OF THIS SOFTWARE OR ITS FITNESS FOR ANY PARTICULAR PURPOSE.

The author of this software is David M. Gay.

Copyright (C) 1998-2001 by Lucent Technologies
All Rights Reserved

Permission to use, copy, modify, and distribute this software and its documentation for any purpose and without fee is hereby granted, provided that the above copyright notice appear in all copies and that both that the copyright notice and this permission notice and warranty disclaimer appear in supporting documentation, and that the name of Lucent or any of its entities not be used in advertising or publicity pertaining to distribution of the software without specific, written prior permission.

LUCENT DISCLAIMS ALL WARRANTIES WITH REGARD TO THIS SOFTWARE, INCLUDING ALL IMPLIED WARRANTIES OF MERCHANTABILITY AND FITNESS. IN NO EVENT SHALL LUCENT OR ANY OF ITS ENTITIES BE LIABLE FOR ANY SPECIAL, INDIRECT OR CONSEQUENTIAL DAMAGES OR ANY DAMAGES WHATSOEVER RESULTING FROM LOSS OF USE, DATA OR PROFITS, WHETHER IN AN ACTION OF CONTRACT, NEGLIGENCE OR OTHER TORTIOUS ACTION, ARISING OUT OF OR IN CONNECTION WITH THE USE OR PERFORMANCE OF THIS SOFTWARE.

(4) Advanced Micro Devices

Copyright 1989, 1990 Advanced Micro Devices, Inc.

This software is the property of Advanced Micro Devices, Inc (AMD) which specifically grants the user the right to modify, use and distribute this software provided this notice is not removed or altered. All other rights are reserved by AMD.

AMD MAKES NO WARRANTY OF ANY KIND, EXPRESS OR IMPLIED, WITH REGARD TO THIS SOFTWARE. IN NO EVENT SHALL AMD BE LIABLE FOR INCIDENTAL OR CONSEQUENTIAL DAMAGES IN CONNECTION WITH OR ARISING FROM THE FURNISHING, PERFORMANCE, OR USE OF THIS SOFTWARE.

So that all may benefit from your experience, please report any problems or suggestions about this software to the 29K Technical Support Center at 800-29-29-AMD (800-292-9263) in the USA, or 0800-89-1131 in the UK, or 0031-11-1129 in Japan, toll free. The direct dial number is 512-462-4118.

Advanced Micro Devices, Inc.
29K Support Products
Mail Stop 573
5900 E. Ben White Blvd.
Austin, TX 78741
800-292-9263

(7) Sun Microsystems

Copyright (C) 1993 by Sun Microsystems, Inc. All rights reserved.

Developed at SunPro, a Sun Microsystems, Inc. business. Permission to use, copy, modify, and distribute this software is freely granted, provided that this notice is preserved.

(8) Hewlett Packard

(c) Copyright 1986 HEWLETT-PACKARD COMPANY

To anyone who acknowledges that this file is provided "AS IS" without any express or implied warranty:

permission to use, copy, modify, and distribute this file for any purpose is hereby

granted without fee, provided that the above copyright notice and this notice appears in all copies, and that the name of Hewlett-Packard Company not be used in advertising or publicity pertaining to distribution of the software without specific, written prior permission. Hewlett-Packard Company makes no representations about the suitability of this software for any purpose.

(9) Hans-Peter Nilsson

Copyright (C) 2001 Hans-Peter Nilsson

Permission to use, copy, modify, and distribute this software is freely granted, provided that the above copyright notice, this notice and the following disclaimer are preserved with no changes.

THIS SOFTWARE IS PROVIDED ``AS IS'' AND WITHOUT ANY EXPRESS OR IMPLIED WARRANTIES, INCLUDING, WITHOUT LIMITATION, THE IMPLIED WARRANTIES OF MERCHANTABILITY AND FITNESS FOR A PARTICULAR PURPOSE.

(11) Christopher G. Demetriou

Copyright (c) 2001 Christopher G. Demetriou
All rights reserved.

Redistribution and use in source and binary forms, with or without modification, are permitted provided that the following conditions are met:
1. Redistributions of source code must retain the above copyright notice, this list of conditions and the following disclaimer.
2. Redistributions in binary form must reproduce the above copyright notice, this list of conditions and the following disclaimer in the documentation and/or other materials provided with the distribution.
3. The name of the author may not be used to endorse or promote products derived from this software without specific prior written permission.

THIS SOFTWARE IS PROVIDED BY THE AUTHOR ``AS IS'' AND ANY EXPRESS OR IMPLIED WARRANTIES, INCLUDING, BUT NOT LIMITED TO, THE IMPLIED WARRANTIES OF MERCHANTABILITY AND FITNESS FOR A PARTICULAR PURPOSE

ARE DISCLAIMED. IN NO EVENT SHALL THE AUTHOR BE LIABLE FOR ANY DIRECT, INDIRECT, INCIDENTAL, SPECIAL, EXEMPLARY, OR CONSEQUENTIAL DAMAGES (INCLUDING, BUT NOT LIMITED TO, PROCUREMENT OF SUBSTITUTE GOODS OR SERVICES; LOSS OF USE, DATA, OR PROFITS; OR BUSINESS INTERRUPTION) HOWEVER CAUSED AND ON ANY THEORY OF LIABILITY, WHETHER IN CONTRACT, STRICT LIABILITY, OR TORT (INCLUDING NEGLIGENCE OR OTHERWISE) ARISING IN ANY WAY OUT OF THE USE OF THIS SOFTWARE, EVEN IF ADVISED OF THE POSSIBILITY OF SUCH DAMAGE.

(12) SuperH, Inc.

Copyright 2002 SuperH, Inc. All rights reserved

This software is the property of SuperH, Inc (SuperH) which specifically grants the user the right to modify, use and distribute this software provided this notice is not removed or altered. All other rights are reserved by SuperH.

SUPERH MAKES NO WARRANTY OF ANY KIND, EXPRESS OR IMPLIED, WITH REGARD TO THIS SOFTWARE. IN NO EVENT SHALL SUPERH BE LIABLE FOR INDIRECT, SPECIAL, INCIDENTAL OR CONSEQUENTIAL DAMAGES IN CONNECTION WITH OR ARISING FROM THE FURNISHING, PERFORMANCE, OR USE OF THIS SOFTWARE.

So that all may benefit from your experience, please report any problems or suggestions about this software to the SuperH Support Center via e-mail at softwaresupport@superh.com .

SuperH, Inc.
405 River Oaks Parkway
San Jose
CA 95134
USA

(13) Royal Institute of Technology

Copyright (c) 1999 Kungliga Tekniska Högskolan

(Royal Institute of Technology, Stockholm, Sweden).
All rights reserved.

Redistribution and use in source and binary forms, with or without modification, are permitted provided that the following conditions are met:

1. Redistributions of source code must retain the above copyright notice, this list of conditions and the following disclaimer.

2. Redistributions in binary form must reproduce the above copyright notice, this list of conditions and the following disclaimer in the documentation and/or other materials provided with the distribution.

3. Neither the name of KTH nor the names of its contributors may be used to endorse or promote products derived from this software without specific prior written permission.

THIS SOFTWARE IS PROVIDED BY KTH AND ITS CONTRIBUTORS ``AS IS'' AND ANY EXPRESS OR IMPLIED WARRANTIES, INCLUDING, BUT NOT LIMITED TO, THE IMPLIED WARRANTIES OF MERCHANTABILITY AND FITNESS FOR A PARTICULAR PURPOSE ARE DISCLAIMED. IN NO EVENT SHALL KTH OR ITS CONTRIBUTORS BE LIABLE FOR ANY DIRECT, INDIRECT, INCIDENTAL, SPECIAL, EXEMPLARY, OR CONSEQUENTIAL DAMAGES (INCLUDING, BUT NOT LIMITED TO, PROCUREMENT OF SUBSTITUTE GOODS OR SERVICES; LOSS OF USE, DATA, OR PROFITS; OR BUSINESS INTERRUPTION) HOWEVER CAUSED AND ON ANY THEORY OF LIABILITY, WHETHER IN CONTRACT, STRICT LIABILITY, OR TORT (INCLUDING NEGLIGENCE OR OTHERWISE) ARISING IN ANY WAY OUT OF THE USE OF THIS SOFTWARE, EVEN IF ADVISED OF THE POSSIBILITY OF SUCH DAMAGE.

(14) Alexey Zelkin

Copyright (c) 2000, 2001 Alexey Zelkin <phantom@FreeBSD.org>
All rights reserved.

Redistribution and use in source and binary forms, with or without modification, are permitted provided that the following conditions are met:
1. Redistributions of source code must retain the above copyright notice, this list of

conditions and the following disclaimer.
2. Redistributions in binary form must reproduce the above copyright notice, this list of conditions and the following disclaimer in the documentation and/or other materials provided with the distribution.

THIS SOFTWARE IS PROVIDED BY THE AUTHOR AND CONTRIBUTORS ``AS IS'' AND ANY EXPRESS OR IMPLIED WARRANTIES, INCLUDING, BUT NOT LIMITED TO, THE IMPLIED WARRANTIES OF MERCHANTABILITY AND FITNESS FOR A PARTICULAR PURPOSE ARE DISCLAIMED. IN NO EVENT SHALL THE AUTHOR OR CONTRIBUTORS BE LIABLE FOR ANY DIRECT, INDIRECT, INCIDENTAL, SPECIAL, EXEMPLARY, OR CONSEQUENTIAL DAMAGES (INCLUDING, BUT NOT LIMITED TO, PROCUREMENT OF SUBSTITUTE GOODS OR SERVICES; LOSS OF USE, DATA, OR PROFITS; OR BUSINESS INTERRUPTION) HOWEVER CAUSED AND ON ANY THEORY OF LIABILITY, WHETHER IN CONTRACT, STRICT LIABILITY, OR TORT (INCLUDING NEGLIGENCE OR OTHERWISE) ARISING IN ANY WAY OUT OF THE USE OF THIS SOFTWARE, EVEN IF ADVISED OF THE POSSIBILITY OF SUCH DAMAGE.

(15) Andrey A. Chernov

Copyright (C) 1997 by Andrey A. Chernov, Moscow, Russia.
All rights reserved.

Redistribution and use in source and binary forms, with or without modification, are permitted provided that the following conditions are met:
1. Redistributions of source code must retain the above copyright notice, this list of conditions and the following disclaimer.
2. Redistributions in binary form must reproduce the above copyright notice, this list of conditions and the following disclaimer in the documentation and/or other materials provided with the distribution.

THIS SOFTWARE IS PROVIDED BY THE AUTHOR ``AS IS'' AND ANY EXPRESS OR IMPLIED WARRANTIES, INCLUDING, BUT NOT LIMITED TO, THE IMPLIED WARRANTIES OF MERCHANTABILITY AND FITNESS FOR A PARTICULAR PURPOSE ARE DISCLAIMED. IN NO EVENT SHALL THE REGENTS OR CONTRIBUTORS BE LIABLE FOR ANY DIRECT, INDIRECT, INCIDENTAL, SPECIAL, EXEMPLARY, OR CONSEQUENTIAL DAMAGES (INCLUDING, BUT NOT LIMITED TO, PROCUREMENT

OF SUBSTITUTE GOODS OR SERVICES; LOSS OF USE, DATA, OR PROFITS; OR BUSINESS INTERRUPTION) HOWEVER CAUSED AND ON ANY THEORY OF LIABILITY, WHETHER IN CONTRACT, STRICT LIABILITY, OR TORT (INCLUDING NEGLIGENCE OR OTHERWISE) ARISING IN ANY WAY OUT OF THE USE OF THIS SOFTWARE, EVEN IF ADVISED OF THE POSSIBILITY OF SUCH DAMAGE.

(16) FreeBSD

Copyright (c) 1997-2002 FreeBSD Project.
All rights reserved.

Redistribution and use in source and binary forms, with or without modification, are permitted provided that the following conditions are met:
1. Redistributions of source code must retain the above copyright notice, this list of conditions and the following disclaimer.
2. Redistributions in binary form must reproduce the above copyright notice, this list of conditions and the following disclaimer in the documentation and/or other materials provided with the distribution.

THIS SOFTWARE IS PROVIDED BY THE AUTHOR AND CONTRIBUTORS ``AS IS'' AND ANY EXPRESS OR IMPLIED WARRANTIES, INCLUDING, BUT NOT LIMITED TO, THE IMPLIED WARRANTIES OF MERCHANTABILITY AND FITNESS FOR A PARTICULAR PURPOSE ARE DISCLAIMED. IN NO EVENT SHALL THE AUTHOR OR CONTRIBUTORS BE LIABLE FOR ANY DIRECT, INDIRECT, INCIDENTAL, SPECIAL, EXEMPLARY, OR CONSEQUENTIAL DAMAGES (INCLUDING, BUT NOT LIMITED TO, PROCUREMENT OF SUBSTITUTE GOODS OR SERVICES; LOSS OF USE, DATA, OR PROFITS; OR BUSINESS INTERRUPTION) HOWEVER CAUSED AND ON ANY THEORY OF LIABILITY, WHETHER IN CONTRACT, STRICT LIABILITY, OR TORT (INCLUDING NEGLIGENCE OR OTHERWISE) ARISING IN ANY WAY OUT OF THE USE OF THIS SOFTWARE, EVEN IF ADVISED OF THE POSSIBILITY OF SUCH DAMAGE.

(17) S. L. Moshier

Author: S. L. Moshier.

Copyright (c) 1984,2000 S.L. Moshier

Permission to use, copy, modify, and distribute this software for any purpose without fee is hereby granted, provided that this entire notice is included in all copies of any software which is or includes a copy or modification of this software and in all copies of the supporting documentation for such software.

THIS SOFTWARE IS BEING PROVIDED "AS IS", WITHOUT ANY EXPRESS OR IMPLIED WARRANTY. IN PARTICULAR, THE AUTHOR MAKES NO REPRESENTATION OR WARRANTY OF ANY KIND CONCERNING THE MERCHANTABILITY OF THIS SOFTWARE OR ITS FITNESS FOR ANY PARTICULAR PURPOSE.

(18) Citrus Project

Copyright (c)1999 Citrus Project,
All rights reserved.

Redistribution and use in source and binary forms, with or without modification, are permitted provided that the following conditions are met:
1. Redistributions of source code must retain the above copyright notice, this list of conditions and the following disclaimer.
2. Redistributions in binary form must reproduce the above copyright notice, this list of conditions and the following disclaimer in the documentation and/or other materials provided with the distribution.

THIS SOFTWARE IS PROVIDED BY THE AUTHOR AND CONTRIBUTORS ``AS IS'' AND ANY EXPRESS OR IMPLIED WARRANTIES, INCLUDING, BUT NOT LIMITED TO, THE IMPLIED WARRANTIES OF MERCHANTABILITY AND FITNESS FOR A PARTICULAR PURPOSE ARE DISCLAIMED. IN NO EVENT SHALL THE AUTHOR OR CONTRIBUTORS BE LIABLE FOR ANY DIRECT, INDIRECT, INCIDENTAL, SPECIAL, EXEMPLARY, OR CONSEQUENTIAL DAMAGES (INCLUDING, BUT NOT LIMITED TO, PROCUREMENT OF SUBSTITUTE GOODS OR SERVICES; LOSS OF USE, DATA, OR PROFITS; OR BUSINESS INTERRUPTION) HOWEVER CAUSED AND ON ANY THEORY OF LIABILITY, WHETHER IN CONTRACT, STRICT LIABILITY, OR TORT (INCLUDING NEGLIGENCE OR OTHERWISE) ARISING IN ANY WAY OUT OF THE USE OF THIS SOFTWARE, EVEN IF ADVISED OF THE POSSIBILITY OF SUCH DAMAGE.

(19) Todd C. Miller

Copyright (c) 1998 Todd C. Miller <Todd.Miller@courtesan.com>
All rights reserved.

Redistribution and use in source and binary forms, with or without modification, are permitted provided that the following conditions are met:
1. Redistributions of source code must retain the above copyright notice, this list of conditions and the following disclaimer.
2. Redistributions in binary form must reproduce the above copyright notice, this list of conditions and the following disclaimer in the documentation and/or other materials provided with the distribution.
3. The name of the author may not be used to endorse or promote products derived from this software without specific prior written permission.

THIS SOFTWARE IS PROVIDED ``AS IS'' AND ANY EXPRESS OR IMPLIED WARRANTIES, INCLUDING, BUT NOT LIMITED TO, THE IMPLIED WARRANTIES OF MERCHANTABILITY AND FITNESS FOR A PARTICULAR PURPOSE ARE DISCLAIMED. IN NO EVENT SHALL THE AUTHOR BE LIABLE FOR ANY DIRECT, INDIRECT, INCIDENTAL, SPECIAL, EXEMPLARY, OR CONSEQUENTIAL DAMAGES (INCLUDING, BUT NOT LIMITED TO, PROCUREMENT OF SUBSTITUTE GOODS OR SERVICES; LOSS OF USE, DATA, OR PROFITS; OR BUSINESS INTERRUPTION) HOWEVER CAUSED AND ON ANY THEORY OF LIABILITY, WHETHER IN CONTRACT, STRICT LIABILITY, OR TORT (INCLUDING NEGLIGENCE OR OTHERWISE) ARISING IN ANY WAY OUT OF THE USE OF THIS SOFTWARE, EVEN IF ADVISED OF THE POSSIBILITY OF SUCH DAMAGE.

(20) DJ Delorie (i386)

Copyright (C) 1991 DJ Delorie
All rights reserved.

Redistribution, modification, and use in source and binary forms is permitted provided that the above copyright notice and following paragraph are duplicated in all such forms.

This file is distributed WITHOUT ANY WARRANTY; without even the implied warranty of MERCHANTABILITY or FITNESS FOR A PARTICULAR PURPOSE.

(23) Intel (i960)

Copyright (c) 1993 Intel Corporation

Intel hereby grants you permission to copy, modify, and distribute this software and its documentation. Intel grants this permission provided that the above copyright notice appears in all copies and that both the copyright notice and this permission notice appear in supporting documentation. In addition, Intel grants this permission provided that you prominently mark as "not part of the original" any modifications made to this software or documentation, and that the name of Intel Corporation not be used in advertising or publicity pertaining to distribution of the software or the documentation without specific, written prior permission.

Intel Corporation provides this AS IS, WITHOUT ANY WARRANTY, EXPRESS OR IMPLIED, INCLUDING, WITHOUT LIMITATION, ANY WARRANTY OF MERCHANTABILITY OR FITNESS FOR A PARTICULAR PURPOSE. Intel makes no guarantee or representations regarding the use of, or the results of the use of, the software and documentation in terms of correctness, accuracy, reliability, currentness, or otherwise; and you rely on the software, documentation and results solely at your own risk.

IN NO EVENT SHALL INTEL BE LIABLE FOR ANY LOSS OF USE, LOSS OF BUSINESS, LOSS OF PROFITS, INDIRECT, INCIDENTAL, SPECIAL OR CONSEQUENTIAL DAMAGES OF ANY KIND. IN NO EVENT SHALL INTEL'S TOTAL LIABILITY EXCEED THE SUM PAID TO INTEL FOR THE PRODUCT LICENSED HEREUNDER.

(26) Mike Barcroft

Copyright (c) 2001 Mike Barcroft <mike@FreeBSD.org>
All rights reserved.

Redistribution and use in source and binary forms, with or without modification, are permitted provided that the following conditions are met:
1. Redistributions of source code must retain the above copyright notice, this list of conditions and the following disclaimer.
2. Redistributions in binary form must reproduce the above copyright notice, this list of

conditions and the following disclaimer in the documentation and/or other materials provided with the distribution.

THIS SOFTWARE IS PROVIDED BY THE AUTHOR AND CONTRIBUTORS ``AS IS'' AND ANY EXPRESS OR IMPLIED WARRANTIES, INCLUDING, BUT NOT LIMITED TO, THE IMPLIED WARRANTIES OF MERCHANTABILITY AND FITNESS FOR A PARTICULAR PURPOSE ARE DISCLAIMED. IN NO EVENT SHALL THE AUTHOR OR CONTRIBUTORS BE LIABLE FOR ANY DIRECT, INDIRECT, INCIDENTAL, SPECIAL, EXEMPLARY, OR CONSEQUENTIAL DAMAGES (INCLUDING, BUT NOT LIMITED TO, PROCUREMENT OF SUBSTITUTE GOODS OR SERVICES; LOSS OF USE, DATA, OR PROFITS; OR BUSINESS INTERRUPTION) HOWEVER CAUSED AND ON ANY THEORY OF LIABILITY, WHETHER IN CONTRACT, STRICT LIABILITY, OR TORT (INCLUDING NEGLIGENCE OR OTHERWISE) ARISING IN ANY WAY OUT OF THE USE OF THIS SOFTWARE, EVEN IF ADVISED OF THE POSSIBILITY OF SUCH DAMAGE.

(27) Konstantin Chuguev (--enable-newlib-iconv)

Copyright (c) 1999, 2000
Konstantin Chuguev. All rights reserved.

Redistribution and use in source and binary forms, with or without modification, are permitted provided that the following conditions are met:
1. Redistributions of source code must retain the above copyright notice, this list of conditions and the following disclaimer.
2. Redistributions in binary form must reproduce the above copyright notice, this list of conditions and the following disclaimer in the documentation and/or other materials provided with the distribution.

THIS SOFTWARE IS PROVIDED BY THE AUTHOR AND CONTRIBUTORS ``AS IS'' AND ANY EXPRESS OR IMPLIED WARRANTIES, INCLUDING, BUT NOT LIMITED TO, THE IMPLIED WARRANTIES OF MERCHANTABILITY AND FITNESS FOR A PARTICULAR PURPOSE ARE DISCLAIMED. IN NO EVENT SHALL THE AUTHOR OR CONTRIBUTORS BE LIABLE FOR ANY DIRECT, INDIRECT, INCIDENTAL, SPECIAL, EXEMPLARY, OR CONSEQUENTIAL DAMAGES (INCLUDING, BUT NOT LIMITED TO, PROCUREMENT OF SUBSTITUTE GOODS OR SERVICES; LOSS OF USE, DATA, OR PROFITS; OR BUSINESS INTERRUPTION) HOWEVER CAUSED AND ON ANY THEORY

OF LIABILITY, WHETHER IN CONTRACT, STRICT LIABILITY, OR TORT (INCLUDING NEGLIGENCE OR OTHERWISE) ARISING IN ANY WAY OUT OF THE USE OF THIS SOFTWARE, EVEN IF ADVISED OF THE POSSIBILITY OF SUCH DAMAGE.

iconv (Charset Conversion Library) v2.0

(28) Artem Bityuckiy (--enable-newlib-iconv)

Copyright (c) 2003, Artem B. Bityuckiy, SoftMine Corporation.
Rights transferred to Franklin Electronic Publishers.

Redistribution and use in source and binary forms, with or without modification, are permitted provided that the following conditions are met:
1. Redistributions of source code must retain the above copyright notice, this list of conditions and the following disclaimer.
2. Redistributions in binary form must reproduce the above copyright notice, this list of conditions and the following disclaimer in the documentation and/or other materials provided with the distribution.

THIS SOFTWARE IS PROVIDED BY THE AUTHOR AND CONTRIBUTORS ``AS IS'' AND ANY EXPRESS OR IMPLIED WARRANTIES, INCLUDING, BUT NOT LIMITED TO, THE IMPLIED WARRANTIES OF MERCHANTABILITY AND FITNESS FOR A PARTICULAR PURPOSE ARE DISCLAIMED. IN NO EVENT SHALL THE AUTHOR OR CONTRIBUTORS BE LIABLE FOR ANY DIRECT, INDIRECT, INCIDENTAL, SPECIAL, EXEMPLARY, OR CONSEQUENTIAL DAMAGES (INCLUDING, BUT NOT LIMITED TO, PROCUREMENT OF SUBSTITUTE GOODS OR SERVICES; LOSS OF USE, DATA, OR PROFITS; OR BUSINESS INTERRUPTION) HOWEVER CAUSED AND ON ANY THEORY OF LIABILITY, WHETHER IN CONTRACT, STRICT LIABILITY, OR TORT (INCLUDING NEGLIGENCE OR OTHERWISE) ARISING IN ANY WAY OUT OF THE USE OF THIS SOFTWARE, EVEN IF ADVISED OF THE POSSIBILITY OF SUCH DAMAGE.

(30) - Alex Tatmanjants (targets using libc/posix)

Copyright (c) 1995 Alex Tatmanjants <alex@elvisti.kiev.ua>
at Electronni Visti IA, Kiev, Ukraine.
All rights reserved.

Redistribution and use in source and binary forms, with or without modification, are permitted provided that the following conditions are met:

1. Redistributions of source code must retain the above copyright notice, this list of conditions and the following disclaimer.
2. Redistributions in binary form must reproduce the above copyright notice, this list of conditions and the following disclaimer in the documentation and/or other materials provided with the distribution.

THIS SOFTWARE IS PROVIDED BY THE AUTHOR ``AS IS'' AND ANY EXPRESS OR IMPLIED WARRANTIES, INCLUDING, BUT NOT LIMITED TO, THE IMPLIED WARRANTIES OF MERCHANTABILITY AND FITNESS FOR A PARTICULAR PURPOSE ARE DISCLAIMED. IN NO EVENT SHALL THE AUTHOR BE LIABLE FOR ANY DIRECT, INDIRECT, INCIDENTAL, SPECIAL, EXEMPLARY, OR CONSEQUENTIAL DAMAGES (INCLUDING, BUT NOT LIMITED TO, PROCUREMENT OF SUBSTITUTE GOODS OR SERVICES; LOSS OF USE, DATA, OR PROFITS; OR BUSINESS INTERRUPTION) HOWEVER CAUSED AND ON ANY THEORY OF LIABILITY, WHETHER IN CONTRACT, STRICT LIABILITY, OR TORT (INCLUDING NEGLIGENCE OR OTHERWISE) ARISING IN ANY WAY OUT OF THE USE OF THIS SOFTWARE, EVEN IF ADVISED OF THE POSSIBILITY OF SUCH DAMAGE.

(31) - M. Warner Losh (targets using libc/posix)

Copyright (c) 1998, M. Warner Losh <imp@freebsd.org>
All rights reserved.

Redistribution and use in source and binary forms, with or without modification, are permitted provided that the following conditions are met:

1. Redistributions of source code must retain the above copyright notice, this list of conditions and the following disclaimer.
2. Redistributions in binary form must reproduce the above copyright notice, this list of conditions and the following disclaimer in the documentation and/or other materials provided with the distribution.

THIS SOFTWARE IS PROVIDED BY THE AUTHOR AND CONTRIBUTORS ``AS IS'' AND ANY EXPRESS OR IMPLIED WARRANTIES, INCLUDING, BUT NOT LIMITED TO,

THE IMPLIED WARRANTIES OF MERCHANTABILITY AND FITNESS FOR A PARTICULAR PURPOSE ARE DISCLAIMED. IN NO EVENT SHALL THE AUTHOR OR CONTRIBUTORS BE LIABLE FOR ANY DIRECT, INDIRECT, INCIDENTAL, SPECIAL, EXEMPLARY, OR CONSEQUENTIAL DAMAGES (INCLUDING, BUT NOT LIMITED TO, PROCUREMENT OF SUBSTITUTE GOODS OR SERVICES; LOSS OF USE, DATA, OR PROFITS; OR BUSINESS INTERRUPTION) HOWEVER CAUSED AND ON ANY THEORY OF LIABILITY, WHETHER IN CONTRACT, STRICT LIABILITY, OR TORT (INCLUDING NEGLIGENCE OR OTHERWISE) ARISING IN ANY WAY OUT OF THE USE OF THIS SOFTWARE, EVEN IF ADVISED OF THE POSSIBILITY OF SUCH DAMAGE.

(32) - Andrey A. Chernov (targets using libc/posix)

Copyright (C) 1996 by Andrey A. Chernov, Moscow, Russia.
All rights reserved.

Redistribution and use in source and binary forms, with or without modification, are permitted provided that the following conditions are met:

1. Redistributions of source code must retain the above copyright notice, this list of conditions and the following disclaimer.
2. Redistributions in binary form must reproduce the above copyright notice, this list of conditions and the following disclaimer in the documentation and/or other materials provided with the distribution.

THIS SOFTWARE IS PROVIDED BY THE AUTHOR ``AS IS'' AND ANY EXPRESS OR IMPLIED WARRANTIES, INCLUDING, BUT NOT LIMITED TO, THE IMPLIED WARRANTIES OF MERCHANTABILITY AND FITNESS FOR A PARTICULAR PURPOSE ARE DISCLAIMED. IN NO EVENT SHALL THE REGENTS OR CONTRIBUTORS BE LIABLE FOR ANY DIRECT, INDIRECT, INCIDENTAL, SPECIAL, EXEMPLARY, OR CONSEQUENTIAL DAMAGES (INCLUDING, BUT NOT LIMITED TO, PROCUREMENT OF SUBSTITUTE GOODS OR SERVICES; LOSS OF USE, DATA, OR PROFITS; OR BUSINESS INTERRUPTION) HOWEVER CAUSED AND ON ANY THEORY OF LIABILITY, WHETHER IN CONTRACT, STRICT LIABILITY, OR TORT (INCLUDING NEGLIGENCE OR OTHERWISE) ARISING IN ANY WAY OUT OF THE USE OF THIS SOFTWARE, EVEN IF ADVISED OF THE POSSIBILITY OF SUCH DAMAGE.

(33) - Daniel Eischen (targets using libc/posix)

Copyright (c) 2001 Daniel Eischen <deischen@FreeBSD.org>.
All rights reserved.

Redistribution and use in source and binary forms, with or without modification, are permitted provided that the following conditions are met:
1. Redistributions of source code must retain the above copyright notice, this list of conditions and the following disclaimer.
2. Redistributions in binary form must reproduce the above copyright notice, this list of conditions and the following disclaimer in the documentation and/or other materials provided with the distribution.

THIS SOFTWARE IS PROVIDED BY THE AUTHOR AND CONTRIBUTORS ``AS IS'' AND ANY EXPRESS OR IMPLIED WARRANTIES, INCLUDING, BUT NOT LIMITED TO, THE IMPLIED WARRANTIES OF MERCHANTABILITY AND FITNESS FOR A PARTICULAR PURPOSE ARE DISCLAIMED. IN NO EVENT SHALL THE REGENTS OR CONTRIBUTORS BE LIABLE FOR ANY DIRECT, INDIRECT, INCIDENTAL, SPECIAL, EXEMPLARY, OR CONSEQUENTIAL DAMAGES (INCLUDING, BUT NOT LIMITED TO, PROCUREMENT OF SUBSTITUTE GOODS OR SERVICES; LOSS OF USE, DATA, OR PROFITS; OR BUSINESS INTERRUPTION) HOWEVER CAUSED AND ON ANY THEORY OF LIABILITY, WHETHER IN CONTRACT, STRICT LIABILITY, OR TORT (INCLUDING NEGLIGENCE OR OTHERWISE) ARISING IN ANY WAY OUT OF THE USE OF THIS SOFTWARE, EVEN IF ADVISED OF THE POSSIBILITY OF SUCH DAMAGE.

(35) - ARM Ltd (arm and thumb variant targets only)

Copyright (c) 2009 ARM Ltd
All rights reserved.

Redistribution and use in source and binary forms, with or without modification, are permitted provided that the following conditions are met:
1. Redistributions of source code must retain the above copyright notice, this list of conditions and the following disclaimer.
2. Redistributions in binary form must reproduce the above copyright notice, this list of conditions and the following disclaimer in the documentation and/or other materials provided with the distribution.

3. The name of the company may not be used to endorse or promote products derived from this software without specific prior written permission.

THIS SOFTWARE IS PROVIDED BY ARM LTD ``AS IS'' AND ANY EXPRESS OR IMPLIED WARRANTIES, INCLUDING, BUT NOT LIMITED TO, THE IMPLIED WARRANTIES OF MERCHANTABILITY AND FITNESS FOR A PARTICULAR PURPOSE ARE DISCLAIMED.
IN NO EVENT SHALL ARM LTD BE LIABLE FOR ANY DIRECT, INDIRECT, INCIDENTAL, SPECIAL, EXEMPLARY, OR CONSEQUENTIAL DAMAGES (INCLUDING, BUT NOT LIMITED TO, PROCUREMENT OF SUBSTITUTE GOODS OR SERVICES; LOSS OF USE, DATA, OR PROFITS; OR BUSINESS INTERRUPTION) HOWEVER CAUSED AND ON ANY THEORY OF LIABILITY, WHETHER IN CONTRACT, STRICT LIABILITY, OR TORT (INCLUDING NEGLIGENCE OR OTHERWISE) ARISING IN ANY WAY OUT OF THE USE OF THIS SOFTWARE, EVEN IF ADVISED OF THE POSSIBILITY OF SUCH DAMAGE.

(41) Ed Schouten - Free BSD

Copyright (c) 2008 Ed Schouten <ed@FreeBSD.org>
All rights reserved.

Redistribution and use in source and binary forms, with or without modification, are permitted provided that the following conditions are met:
1. Redistributions of source code must retain the above copyright notice, this list of conditions and the following disclaimer.
2. Redistributions in binary form must reproduce the above copyright notice, this list of conditions and the following disclaimer in the documentation and/or other materials provided with the distribution.

THIS SOFTWARE IS PROVIDED BY THE AUTHOR AND CONTRIBUTORS ``AS IS'' AND ANY EXPRESS OR IMPLIED WARRANTIES, INCLUDING, BUT NOT LIMITED TO, THE IMPLIED WARRANTIES OF MERCHANTABILITY AND FITNESS FOR A PARTICULAR PURPOSE ARE DISCLAIMED. IN NO EVENT SHALL THE AUTHOR OR CONTRIBUTORS BE LIABLE FOR ANY DIRECT, INDIRECT, INCIDENTAL, SPECIAL, EXEMPLARY, OR CONSEQUENTIAL DAMAGES (INCLUDING, BUT NOT LIMITED TO, PROCUREMENT OF SUBSTITUTE GOODS OR SERVICES; LOSS OF USE, DATA, OR

PROFITS; OR BUSINESS INTERRUPTION) HOWEVER CAUSED AND ON ANY THEORY OF LIABILITY, WHETHER IN CONTRACT, STRICT LIABILITY, OR TORT (INCLUDING NEGLIGENCE OR OTHERWISE) ARISING IN ANY WAY OUT OF THE USE OF THIS SOFTWARE, EVEN IF ADVISED OF THE POSSIBILITY OF SUCH DAMAGE.

・jQuery

Copyright JS Foundation and other contributors, https://js.foundation/

Permission is hereby granted, free of charge, to any person obtaining a copy of this software and associated documentation files (the "Software"), to deal in the Software without restriction, including without limitation the rights to use, copy, modify, merge, publish,
distribute, sublicense, and/or sell copies of the Software, and to permit persons to whom the Software is furnished to do so, subject to the following conditions:

The above copyright notice and this permission notice shall be included in all copies or substantial portions of the Software.

THE SOFTWARE IS PROVIDED "AS IS", WITHOUT WARRANTY OF ANY KIND, EXPRESS OR IMPLIED, INCLUDING BUT NOT LIMITED TO THE WARRANTIES OF MERCHANTABILITY, FITNESS FOR A PARTICULAR PURPOSE AND NONINFRINGEMENT. IN NO EVENT SHALL THE AUTHORS OR COPYRIGHT HOLDERS BE LIABLE FOR ANY CLAIM, DAMAGES OR OTHER LIABILITY, WHETHER IN AN ACTION OF CONTRACT, TORT OR OTHERWISE, ARISING FROM, OUT OF OR IN CONNECTION WITH THE SOFTWARE OR THE USE OR OTHER DEALINGS IN THE SOFTWARE.

SPECIFICATIONS OF NAVTEX RECEIVER NX-900

1 GENERAL

1.1	Receiving frequency	518 kHz, 490 kHz and 4209.5 kHz receiving three frequencies simultaneously
1.2	Class of emission	F1B
1.3	Modulation	FSK, 100 bps, ±85 Hz deviation
1.4	Sensitivity	-107 dBm input, error rate: 4% or less
1.5	Spurious emission	1 nW or less

2 MAIN UNIT

2.1	Screen type	5.7-inch color TFT, 640 x 480 (VGA)
2.2	Screen size	115.2 (W) x 86.4 (H) mm
2.3	Visible distance	0.62 m nominal
2.4	Brightness	395 cd/m^2 typical
2.5	Brilliance	20 steps (off to maximum brightness)
2.6	Display color	Day/Night mode
2.7	Language	English
2.8	Display modes	Message list, Message details
2.9	Message capacity	500 characters with 200 messages x 3 channels
2.10	Alert category	Navigational warning Meteorological warning Search and rescue information Printer error
2.11	Printed number of characters	32 characters/line

3 ANTENNA UNIT

3.1	Antenna type	H-field antenna
3.2	Receiving polarity	Omnidirectional
3.3	Input impedance	50 ohms

4 PRINTER

	PP-900 (option)	Refer to specifications for printer

5 INTERFACE

5.1	Number of ports	
	Serial	2 ports, IEC61162-1 Ed.5, 4800 bps
	LAN	1 port, Ethernet 100Base-TX, RJ45 connector, Auto MDI/MDIX, for IEC61162-450 Ed.2
	RS-232C	1 port for printer, Xon/Xoff flow control, ESC/POS command compliance
	Contact closure	1 port, for alert, 50V: 40mA or less, normal close
5.2	Data sentences	IEC61162-1/450
	Input data	ACK, ACN, CRQ, DDC, GGA, GLL, GNS, HBT, NRM, RMC, SRP*, VBW, VHW, VTG, ZDA

	Output data	ALC, ALF, ALR, ARC, DDC, HBT, NRM, NRX, SRP* *: IEC61162-450 only
5.3	Output proprietary sentences	
	PFEC	pidat
5.4	IEC61162-450 transmission group	
	Input	MISC, TGTD, SATD, NAVD, VDRD, RCOM, TIME, PROP, USR1 to USR8, BAM1, BAM2, CAM1, CAM2, NETA
	Output	Arbitrary (default: RCOM, NETA)
5.5	Network function (except IEC61162-450)	
		ICMP, ARP, SSDP, HTTP, TCP, UDP

6 POWER SUPPLY

6.1	Main unit	12-24 VDC (10.8-31.2 V): 0.7-0.35 A
6.2	Junction box (option)	12-24 VDC (10.8-31.2 V): 2.0-1.1 A (main unit and printer included)

7 ENVIRONMENTAL CONDITION

7.1	Ambient temperature	
	Main unit	-20ºC to +55ºC (storage: -20ºC to +70ºC)
	Antenna unit	-25ºC to +55ºC (storage: -25ºC to +70ºC)
	Junction box	-15°C to +55ºC (storage: -30ºC to +70ºC)
7.2	Relative humidity	93% or less at +40ºC
7.3	Degree of protection	
	Antenna unit	IP56
	Main unit	IP20 (IP22: for flush mount or with optional LAN cable)
	Junction box	IP20 (IP22: bulkhead mount)
7.4	Vibration	IEC60945 Ed.4

8 UNIT COLOR

8.1	Main unit	N1.0
8.2	Antenna unit	N9.5
8.3	Junction box	N2.5

PACKING LIST

08BB-X-9856 -1 1/1

NX-900-*

A-1

NAME	OUTLINE	DESCRIPTION/CODE No.	Q'TY
ユニット UNIT			
本体 MAIN UNIT		NX-900-* 000-042-858-00 **	1
予備品 SPARE PARTS			
予備品 SPARE PARTS		SP08-02501 001-644-810-00	1
工事材料 INSTALLATION MATERIALS			
工事材料 INSTALLATION MATERIALS		CP08-02501 001-644-820-00	1
ｹｰﾌﾞﾙ(ｸﾐﾋﾝ) CABLE ASSEMBLY	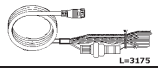	FRU-CF-F01-C01 000-200-060-10	1
図書 DOCUMENT			
取扱説明書CD OPERATOR'S MUNUAL CD		NX900 O/M *CDROM* 000-199-990-1*	1
操作要領書(和・英) OPERATOR'S GUIDE (JP/EN)	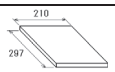	OSC-57150-* 000-199-980-1*	1 (*1)
操作要領書(和) OPERATOR'S GUIDE (JP)	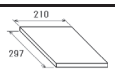	OSJ-57152-* 000-200-483-1*	1 (*2)
装備ｶﾞｲﾄﾞ INSTALLATION GUIDE	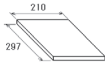	C52-02301-* 000-200-452-1*	1

ｺｰﾄﾞ番号末尾の[**]は、選択品の代表ｺｰﾄﾞを表します。
CODE NUMBER ENDING WITH "**" INDICATES THE CODE NUMBER OF REPRESENTATIVE MATERIAL.
(*1)の書類は英文仕様専用です。
(*1) MARKED DOCUMENTS ARE FOR ENGLISH SET ONLY.
(*2)の書類は和文仕様専用です。
(*2) MARKED DOCUMENTS ARE FOR JAPANESE SET ONLY.

(略図の寸法は、参考値です。 DIMENSIONS IN DRAWING FOR REFERENCE ONLY.)

C5715-Z05-A

PACKING LIST

08BB-X-9857 -1 1/1

OP08-22

A-2

NAME	OUTLINE	DESCRIPTION/CODE No.	Q'TY
ﾌﾗｯｼｭﾏｳﾝﾄ部品 FLUSH MOUNTING PARTS			
前留めﾊﾟﾈﾙ FRONT FIXING PANEL	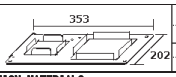	08-025-3601-1 100-444-031-10	1
工事材料 INSTALLATION MATERIALS			
+ﾄﾗｽﾀｯﾋﾟﾝﾈｼﾞ 1ｼｭ SELF-TAPPING SCREW		5X20 SUS304 000-162-608-10	4
+ﾊﾞｲﾝﾄﾞｺﾈｼﾞ BINDING HEAD SCREW		M4X20 SUS304 000-162-668-10	8

(略図の寸法は、参考値です。 DIMENSIONS IN DRAWING FOR REFERENCE ONLY.)

C5715-Z06-B

PACKING LIST

08BB-X-9854 -0 1/1

IF-900

A-3

NAME	OUTLINE	DESCRIPTION/CODE No.	Q'TY
ユニット UNIT			
接続箱 JUNCTION BOX	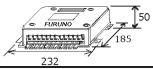	IF-900 000-042-872-00	1
工事材料 INSTALLATION MATERIALS			
工事材料 INSTALLATION MATERIALS		CP08-02801 001-644-890-00	1

(略図の寸法は、参考値です。 DIMENSIONS IN DRAWING FOR REFERENCE ONLY.)

C5715-Z03-A

PACKING LIST

08BB-X-9855 -0 1/1

NX-9HE/9HJ

A-4

NAME	OUTLINE	DESCRIPTION/CODE No.	Q'TY
ユニット UNIT			
空中線部 ANTENNA UNIT		NX-9H* 000-042-864-00 **	1
工事材料 INSTALLATION MATERIALS			
工事材料 INSTALLATION MATERIALS		CP08-02601 001-644-830-00	1

ｺｰﾄﾞ番号末尾の[**]は、選択品の代表ｺｰﾄﾞを表します。
CODE NUMBER ENDING WITH "**" INDICATES THE CODE NUMBER OF REPRESENTATIVE MATERIAL.

(略図の寸法は、参考値です。 DIMENSIONS IN DRAWING FOR REFERENCE ONLY.)

C5715-Z04-A

PACKING LIST

08BB-X-9851 -0 1/1

NX-900-*/NX-9H*

A-5

NAME	OUTLINE	DESCRIPTION/CODE No.	Q'TY
ユニット UNIT			
本体 MAIN UNIT		NX-900-* 000-042-858-00 **	1
空中線部 ANTENNA UNIT	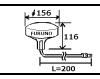	NX-9H* 000-042-864-00 **	1
予備品 SPARE PARTS			
予備品 SPARE PARTS		SP08-02501 001-644-810-00	1
工事材料 INSTALLATION MATERIALS			
ｹｰﾌﾞﾙ(ｸﾐﾐﾝ) CABLE ASSEMBLY	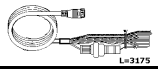	FRU-CF-F01-C01 000-200-060-10	1
工事材料 INSTALLATION MATERIALS		CP08-02501 001-644-820-00	1
工事材料 INSTALLATION MATERIALS		CP08-02601 001-644-830-00	1
図書 DOCUMENT			
取扱説明書CD OPERATOR'S MUNUAL CD		NX900 O/M *CDROM* 000-199-990-1*	1
操作要領書(和・英) OPERATOR'S GUIDE (JP/EN)	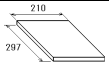	OSC-57150-* 000-199-980-1*	1 (*1)
操作要領書(和) OPERATOR'S GUIDE (JP)	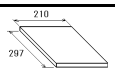	OSJ-57152-* 000-200-483-1*	1 (*2)
装備ｶﾞｲﾄﾞ INSTALLATION GUIDE	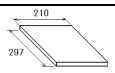	C52-02301-* 000-200-452-1*	1

ｺｰﾄﾞ番号末尾の[**]は、選択品の代表ｺｰﾄﾞを表します。
CODE NUMBER ENDING WITH "**" INDICATES THE CODE NUMBER OF REPRESENTATIVE MATERIAL.
(*1)の書類は英文仕様専用です。
(*1) MARKED DOCUMENTS ARE FOR ENGLISH SET ONLY.
(*2)の書類は和文仕様専用です。
(*2) MARKED DOCUMENTS ARE FOR JAPANESE SET ONLY.

(略図の寸法は、参考値です。 DIMENSIONS IN DRAWING FOR REFERENCE ONLY.)

C5715-Z02-A

A-6

FURUNO

CODE NO.	001-644-820-00	08BB-X-9401 -0
TYPE	CP08-02501	1/1

工事材料表

INSTALLATION MATERIALS

番号 NO.	名称 NAME	略図 OUTLINE	型名／規格 DESCRIPTIONS	数量 Q'TY	用途／備考 REMARKS
1	+ﾄﾗｽﾀｯﾋﾟﾝﾈｼﾞ 1ｼｭ SELF-TAPPING SCREW		4X20 SUS304 CODE NO. 000-158-850-10	4	
2	+ﾄﾗｽﾀｯﾋﾟﾝﾈｼﾞ 1ｼｭ SELF-TAPPING SCREW		5X20 SUS304 CODE NO. 000-162-608-10	4	

(略図の寸法は、参考値です。 DIMENSIONS IN DRAWING FOR REFERENCE ONLY.)

FURUNO ELECTRIC CO., LTD.

C5715-M02-A

A-7

FURUNO

CODE NO.	001-644-830-00	08BB-X-9402 -0
TYPE	CP08-02601	1/1

工事材料表

INSTALLATION MATERIALS

番号 NO.	名称 NAME	略図 OUTLINE	型名／規格 DESCRIPTIONS	数量 Q'TY	用途／備考 REMARKS
1	ﾊﾟｲﾌﾟ PIPE	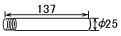	20-007-3011-4 CODE NO. 100-183-264-10	1	
2	取付補助金具 INSTALLING SPACER	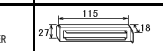	20-007-3012-1 ROHS CODE NO. 100-183-271-10	1	
3	ﾎｰｽｸﾗﾝﾌﾟ HOSE CLAMP	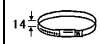	NO.6348 CODE NO. 000-166-005-10	2	
4	絶縁ﾃｰﾌﾟ INSULATION TAPE	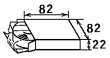	Uﾃｰﾌﾟ 0.5X19X5M CODE NO. 000-165-833-10	1	

(略図の寸法は、参考値です。 DIMENSIONS IN DRAWING FOR REFERENCE ONLY.)

FURUNO ELECTRIC CO., LTD.

C5715-M03-A

A-8

FURUNO

CODE NO.	001-644-890-00	08BB-X-9404 -0
TYPE	CP08-02801	1/1

工事材料表

INSTALLATION MATERIALS

番号 NO.	名称 NAME	略図 OUTLINE	型名／規格 DESCRIPTIONS	数量 Q'TY	用途／備考 REMARKS
1	+ﾄﾗｽﾀｯﾋﾟﾝﾈｼﾞ 1ｼｭ SELF TAPPING SCREW		4X16 SUS304 CODE NO. 000-162-605-10	4	

(略図の寸法は、参考値です。 DIMENSIONS IN DRAWING FOR REFERENCE ONLY.)

FURUNO ELECTRIC CO., LTD.

C5715-M04-A

FURUNO

CODE NO.	001-644-810-00	08BB-X-9301 -0 1/1	
TYPE	SP08-02501	BOX NO. P	

SHIP NO.	SPARE PARTS LIST FOR	U S E	SETS PER VESSEL.

ITEM NO.	NAME OF PART	OUTLINE	DWG. NO. OR TYPE NO.	QUANTITY WORKING PER SET	QUANTITY WORKING PER VES	QUANTITY SPARE	REMARKS/CODE NO.
1	ヒューズ GLASS TUBE FUSE	30 φ6	FGBO-A 250V 2A PBF	1	1	2	000-155-829-10

MFR'S NAME	FURUNO ELECTRIC CO.,LTD.	DWG NO.	C5715-P02-A	1/1

(略図の寸法は、参考値です。 DIMENSIONS IN DRAWING FOR REFERENCE ONLY.)

FURUNO

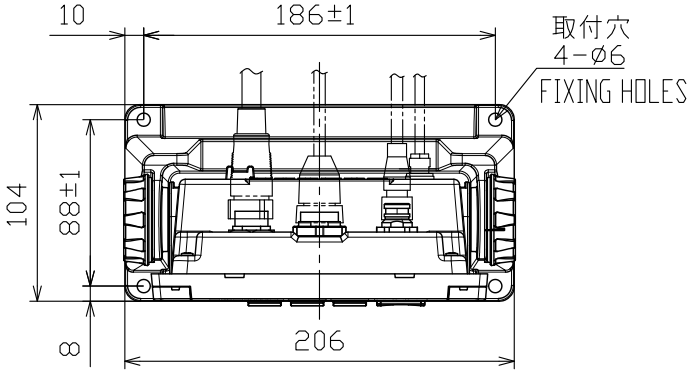

表1 TABLE 1

寸法区分 (mm) DIMENSION	公差 (mm) TOLERANCE
L≦50	±1.5
50<L≦100	±2.5
100<L≦500	±3

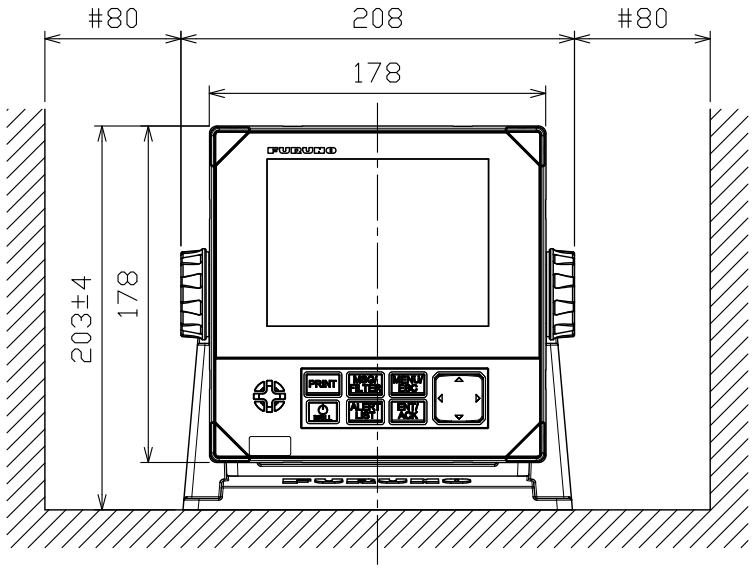

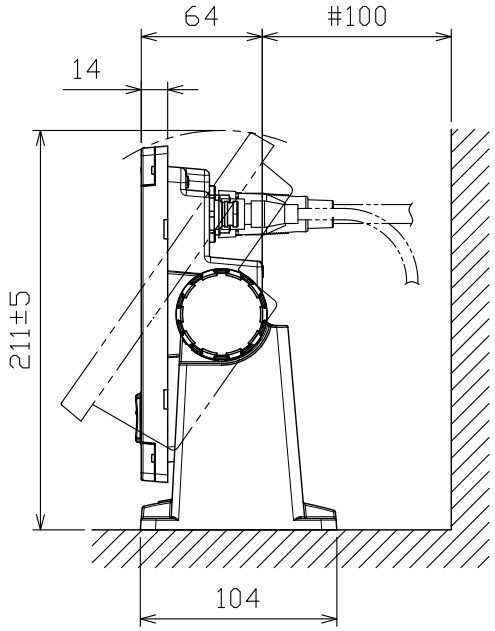

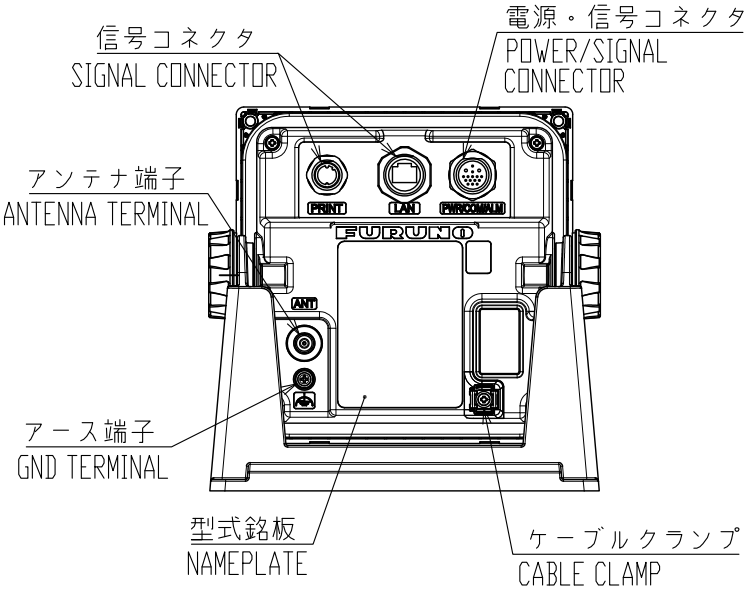

注　記

1）指定外の寸法公差は表１による。

2）＃印寸法は最小サービス空間寸法とする。

3）取付用ネジはトラスタッピンネジ呼び径５×２０を使用のこと。

NOTE

1. TABLE 1 INDICATES TOLERANCE OF DIMENSIONS WHICH IS NOT SPECIFIED.
2. #: MINIMUM SERVICE CLEARANCE.
3. USE TAPPING SCREWS ø5x20 FOR FIXING THE UNIT.

DRAWN 16/Aug/2023 S.HAN			TITLE NX-900
CHECKED 16/Aug/2023 T.YAMASAKI			名称 本体（卓上装備）
APPROVED 1/Jun/2023 H.MAKI			外寸図
SCALE 1/4	MASS 1.2 ±10% kg	質量はケーブルを含まず。 MASS DOES NOT INCLUDE CABLE.	NAME MAIN UNIT (TABLETOP MOUNT)
DWG.No. C5715-G01- C		REF.No. 08-025-250G-3	OUTLINE DRAWING

FURUNO ELECTRIC CO., LTD.

D-1

FURUNO

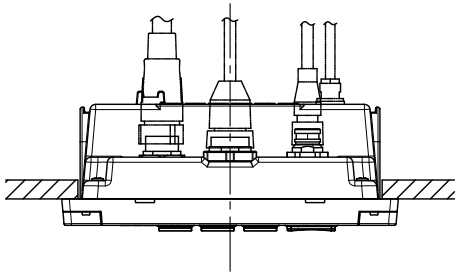

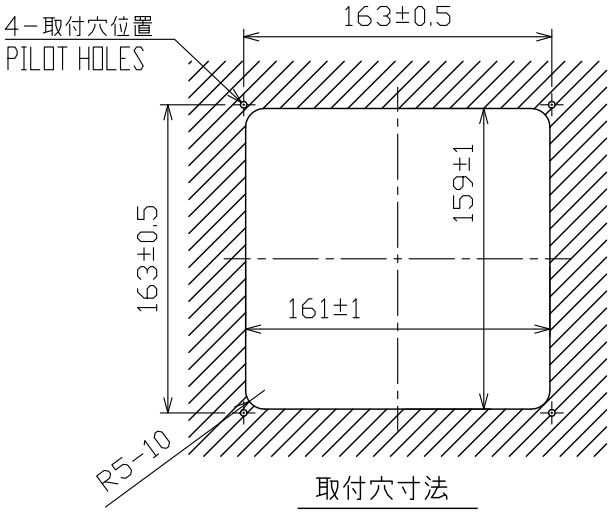

取付穴寸法
CUTOUT DIMENSIONS

表1 TABLE 1

寸法区分（mm）DIMENSION	公差（mm）TOLERANCE
L≦50	±1.5
50<L≦100	±2.5
100<L≦500	±3

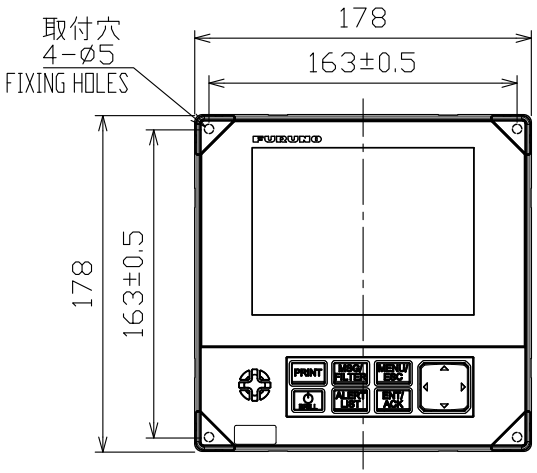

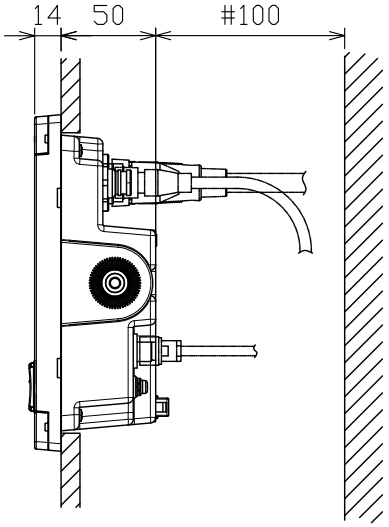

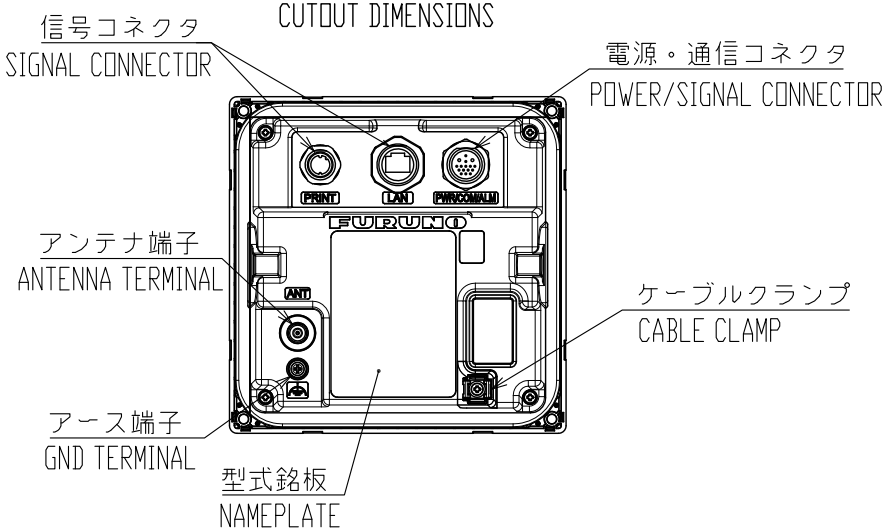

注　記

１）指定外の寸法公差は表１による。

２）#印寸法は最小サービス空間寸法とする。

３）取付用ネジはトラスタッピンネジ呼び径４×２０を使用のこと。

NOTE

1. TABLE 1 INDICATES TOLERANCE OF DIMENSIONS WHICH IS NOT SPECIFIED.
2. #: MINIMUM SERVICE CLEARANCE.
3. USE TAPPING SCREWS ø4x20 FOR FIXING THE UNIT.

DRAWN 16/Aug/2023 S.HAN			TITLE NX-900
CHECKED 16/Aug/2023 T.YAMASAKI			名称 本体（埋込装備）
APPROVED 5/Jun/2023 H.MAKI			外寸図
SCALE 1/4	MASS 0.86 ±10% kg	質量はケーブルを含まず。 MASS DOES NOT INCLUDE CABLE.	NAME MAIN UNIT (FLUSH MOUNT)
DWG.No. C5715-G02- C		REF.No. 08-025-251G-3	OUTLINE DRAWING

FURUNO ELECTRIC CO., LTD.

FURUNO

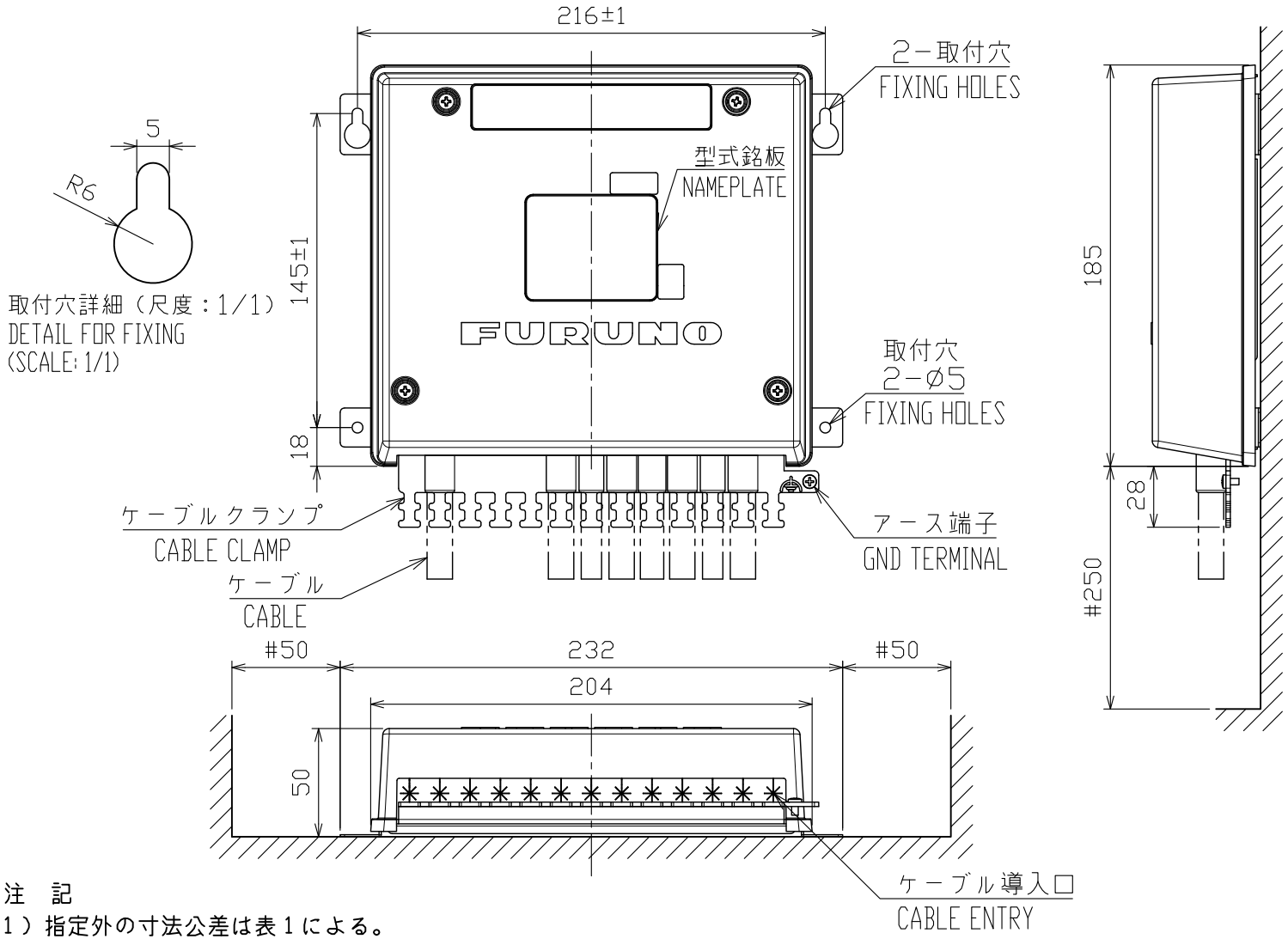

表1 TABLE1

寸法区分（mm）DIMENTION	公差（mm）TOLERANCE
L≦50	±1.5
50<L≦100	±2.5
100<L≦500	±3

注　記

1）指定外の寸法公差は表１による。

2）＃印寸法は最小サービス空間寸法とする。

3）取付用ネジは＋トラスタッピンネジ呼び径４×１６を使用のこと。

NOTE

1. TABLE 1 INDICATES TOLERANCE OF DIMENSIONS WHICH IS NOT SPECIFIED.
2. #: MINIMUM SERVICE CLEARANCE.
3. USE TAPPING SCREWS φ4x16 FOR FIXING THE UNIT.

DRAWN 1/Jun/2023 S.HAN		TITLE	IF-900
CHECKED 1/Jun/2023 T.YAMASAKI		名称	接続箱（壁掛装備）
APPROVED 1/Jun/2023 H.MAKI	NX-900		外寸図
SCALE 1/3 MASS 0.84 ±10% kg	質量はケーブルを含まず。MASS DOES NOT INCLUDE CABLE.	NAME	JUNCTION BOX (BULKHEAD MOUNT)
DWG.No. C5715-G03- B	REF.No. 08-025-450G-2		OUTLINE DRAWING

FURUNO ELECTRIC CO., LTD.

FURUNO

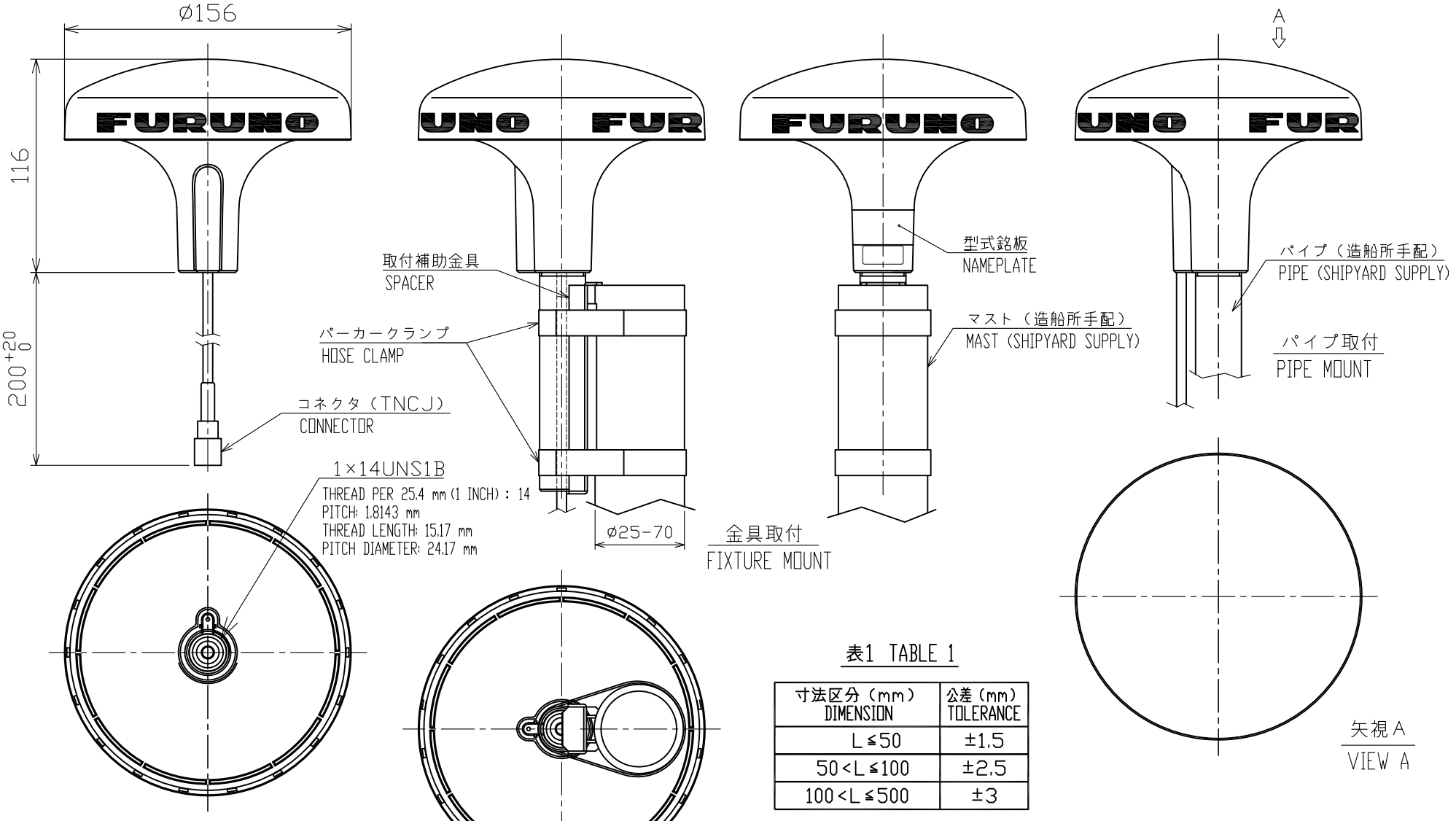

表1 TABLE 1

寸法区分（mm）DIMENSION	公差（mm）TOLERANCE
L≦50	±1.5
50<L≦100	±2.5
100<L≦500	±3

注 記

1）指定外の寸法公差は表1による。

NOTE

1. TABLE 1 INDICATES TOLERANCE OF DIMENSIONS WHICH IS NOT SPECIFIED.

DRAWN 1/Jun/2023 S.HAN			TITLE NX-9HE/9HJ
CHECKED 1/Jun/2023 T.YAMASAKI			名称 空中線部
APPROVED 1/Jun/2023 H.MAKI	NX-900		外寸図
SCALE 1/3	MASS 0.48 ±10% kg	質量は工事材料を含まず。 MASS DOES NOT INCLUDE INST. MATERIAL.	NAME ANTENNA UNIT
DWG.No. C5715-G06- B	REF.No. 08-025-350G-2		OUTLINE DRAWING

FURUNO ELECTRIC CO., LTD.

A)マストへの取付け　MAST MOUNTING

a)マスト取付金具CP20-01111(工事材料)でマストに固定する。
USE MAST MOUNTING KIT CP20-01111.

b)パイプのみを使うとき
USE A PIPE ONLY.

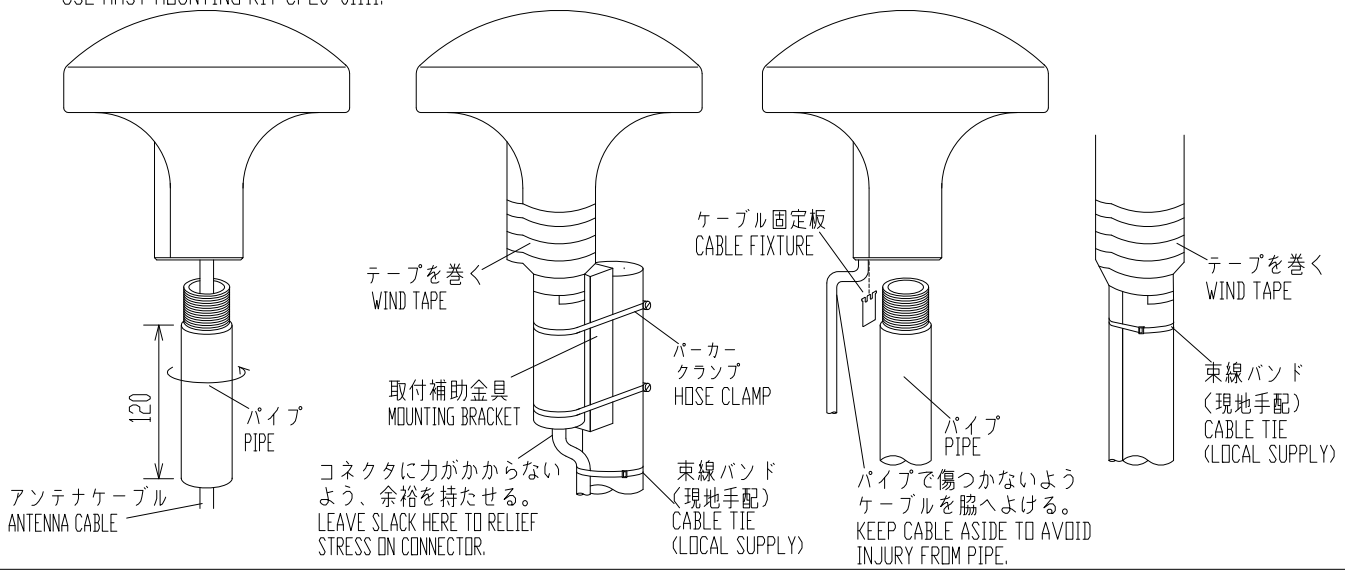

B)スタンションやパルピットにつけるとき　HANDRAIL MOUNTING

レール用アンテナベース No.13-RC5160 (コード番号:000-806-114)
取付可能レール直径:Ø19-32

USE HANDRAIL MOUNTING BASE No.13-RC5160
(CODE No.000-806-114, OPTION).
THE DIAMETER OF THE HANDRAIL SHOULD BE FROM
Ø19mm TO Ø32mm.

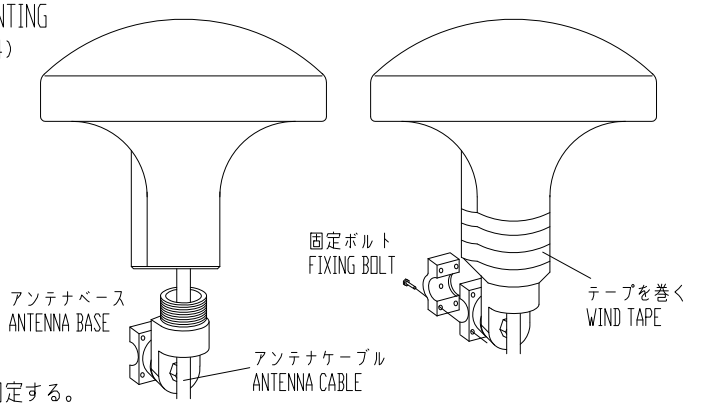

1) パイプ(アンテナベース)はアンテナユニットにねじ込んだ後に固定する。
2) アンテナを固定するときはパイプ(アンテナベース)をアンテナにねじ込むこと。
アンテナ側をねじるとコネクタ部やケーブルに無理がかかり、故障の原因となる。

1. FASTEN PIPE(ANTENNA BASE) TO ANTENNA UNIT FIRST THEN FIX THEM TO MAST OR HANDRAIL.
2. WHEN FIXING ANTENNA, TURN PIPE OR ANTENNA BASE; NOT THE ANTENNA.
TURNING THE ANTENNA MAY TWIST THE CABLE AND PLACE STRESS ON CONNECTOR.

C)取付ける場所が傾斜しているとき　ANTENNA BASE MOUNTING

オプションのアンテナベースを使う。
USE OPTIONAL ANTENNA BASE No.13-QA330/QA310.

傾斜 INCLINATION	-5° - 33°	32° - 65°	65° - 98°
装備方法 MOUNTING METHOD	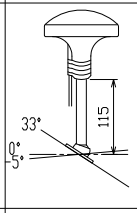	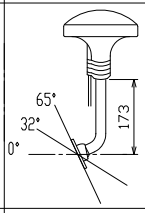	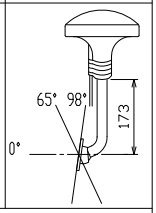
アンテナベース型式 ANTENNA BASE TYPE	直型アンテナベース RIGHT ANGLE ANTENNA BASE No.13-QA330	L型アンテナベース L-TYPE ANTENNA BASE No.13-QA310	
コード番号 CODE No.	000-803-239	000-803-240	

アンテナベース基部
MOUNTING DIMENSIONS OF ANTENNA BASE

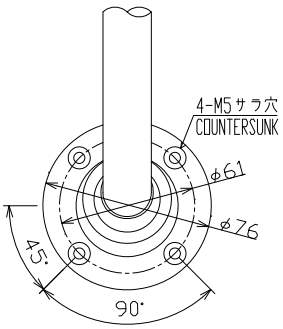

取付位置
MOUNTING LOCATION

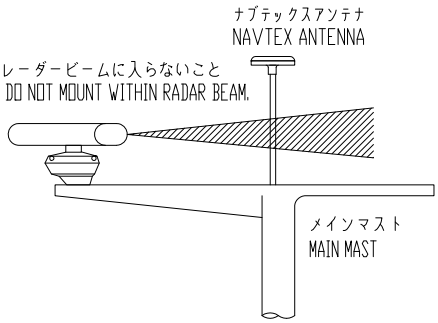

DRAWN 21/Aug/2023 S.HAN			TITLE NX series
CHECKED 21/Aug/2023 T.YAMASAKI			名称 空中線部
APPROVED 21/Aug/2023 H.MAKI			装備要領図
SCALE	MASS		NAME ANTENNA UNIT
DWG. No. C5715-Y01- A		REF. No.	INSTALLATION PROCEDURE

FURUNO

表1 TABLE 1

寸法区分 (mm) DIMENSION	公差 (mm) TOLERANCE
L≦50	±1.5
50<L≦100	±2.5
100<L≦500	±3

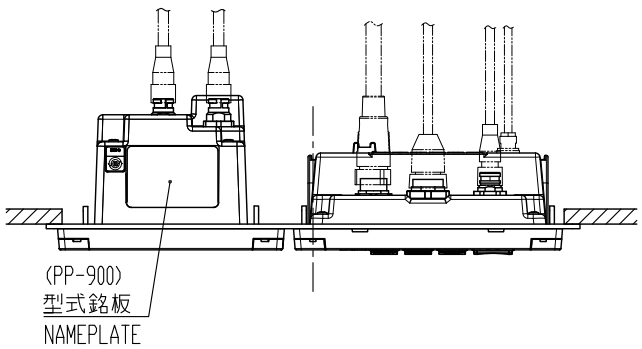

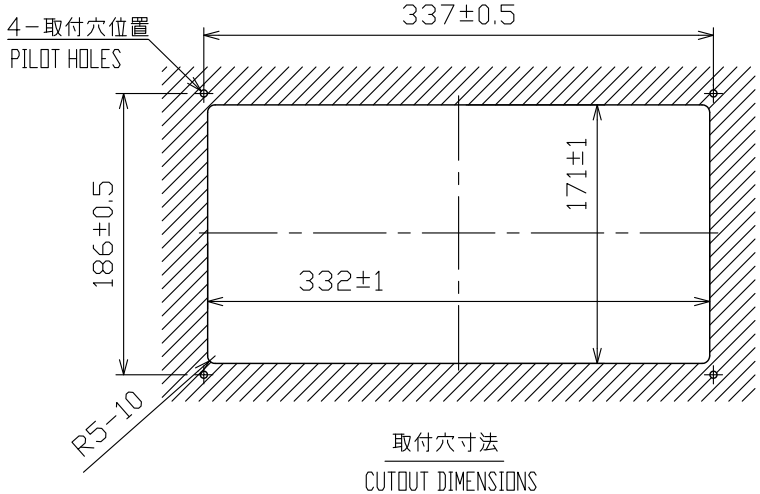

取付穴寸法
CUTOUT DIMENSIONS

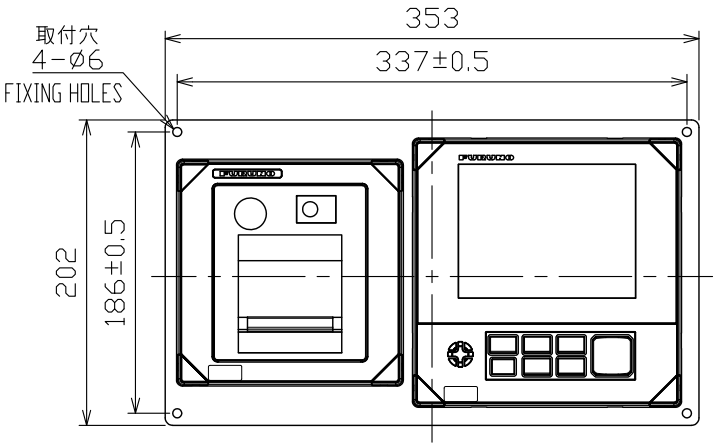

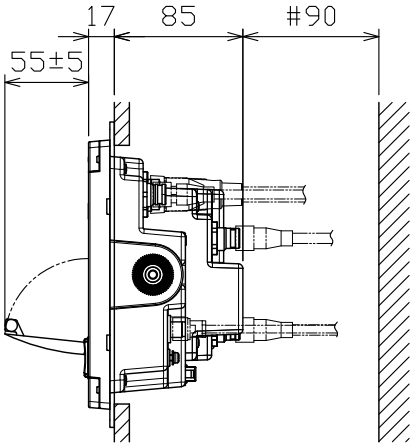

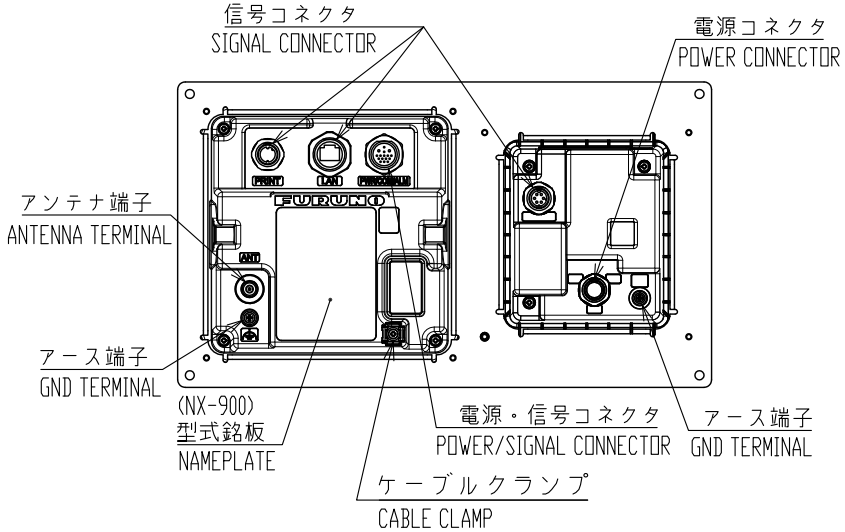

注　記

1）指定外の寸法公差は表１による。

2）＃印寸法は最小サービス空間寸法とする。

3）取付用ネジは＋トラスタッピンネジ呼び径５×２０を使用のこと。

NOTE

1. TABLE 1 INDICATES TOLERANCE OF DIMENSIONS WHICH IS NOT SPECIFIED.
2. #: MINIMUM SERVICE CLEARANCE.
3. USE TAPPING SCREWS Ø5x20 FOR FIXING THE UNIT.

DRAWN 16/Aug/2023 S.HAN		TITLE	NX-900 + PP-900
CHECKED 16/Aug/2023 T.YAMASAKI		名称	本体・プリンタ(埋込パネル)
APPROVED 5/Jun/2023 H.MAKI	NX-900		外寸図
SCALE 1/5 MASS 1.7 ±10% kg	質量はケーブルを含まず。 MASS DOES NOT INCLUDE CABLE.	NAME	MAIN UNIT + PRINTER (FLUSH MOUNT PANEL)
DWG.No. C5715-G07-C	REF.No. 08-025-260G-2		OUTLINE DRAWING

FURUNO ELECTRIC CO., LTD.

FURUNO

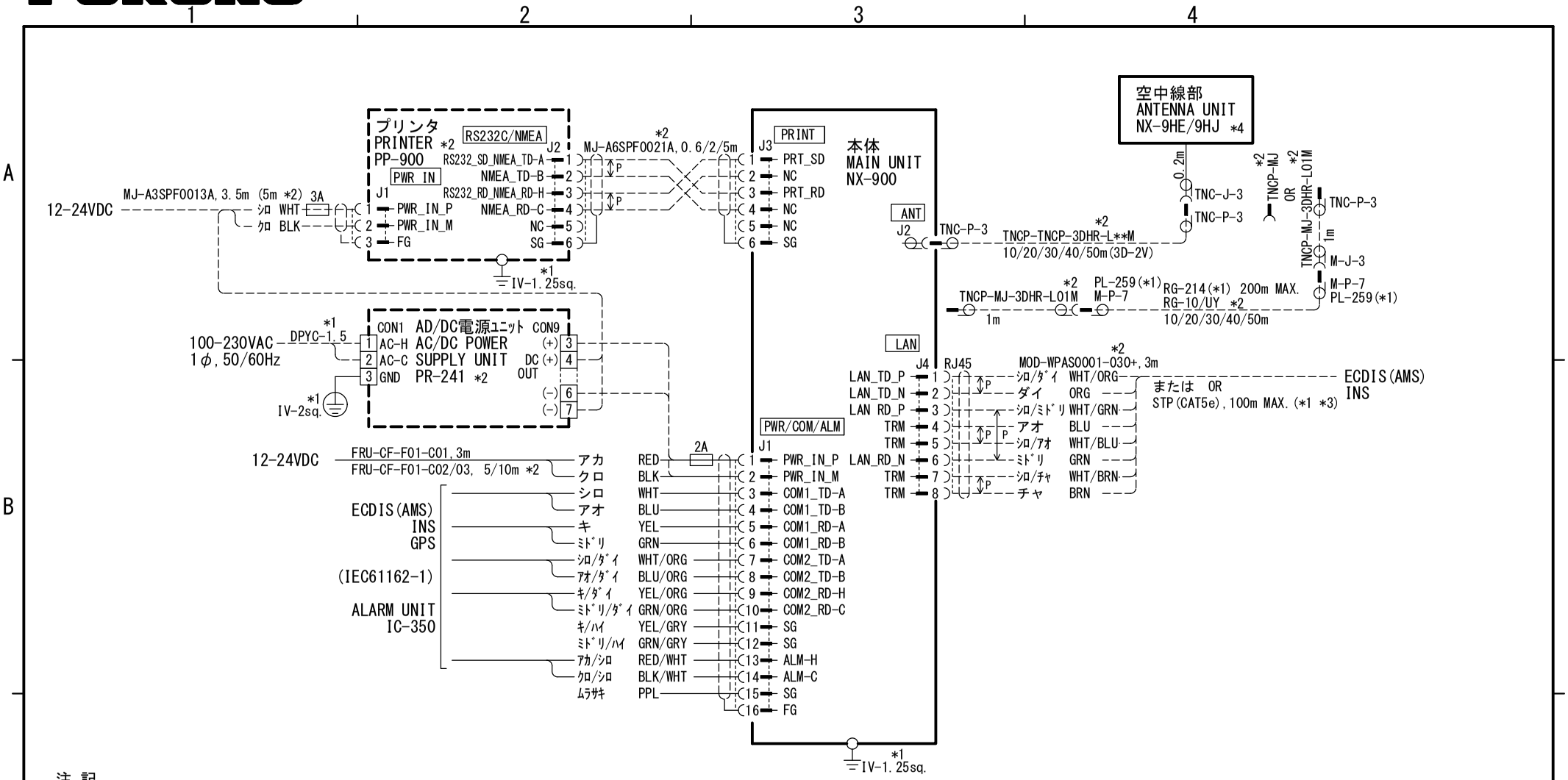

注 記

＊1）造船所手配。

＊2）オプション。

＊3）標準LANケーブル使用時コネクタパネルの防水は無効。

＊4）NX-9HE:国際用、NX-9HJ:日本語用。

NOTE

*1: SHIPYARD SUPPLY.

*2: OPTION.

*3: WATERPROOF AT CONNECTOR PANEL IS INVALID WHEN A STANDARD LAN CABLE IS USED.

*4: NX-9HE: FOR INTERNATIONAL, NX-9HJ: FOR JAPAN.

DRAWN 19/Nov/2024 T. YAMASAKI		TYPE	NX-900
CHECKED 21/Nov/2024 A. Murao		名 称	ナブテックス受信機
APPROVED 21/Nov/2024 A. Murao			相互結線図
SCALE / MASS kg		NAME	NAVTEX RECEIVER
DWG. No. C5715-C01- G	REF. No. 08-025-1001-0		INTERCONNECTION DIAGRAM

S-1

FURUNO ELECTRIC CO., LTD.

FURUNO

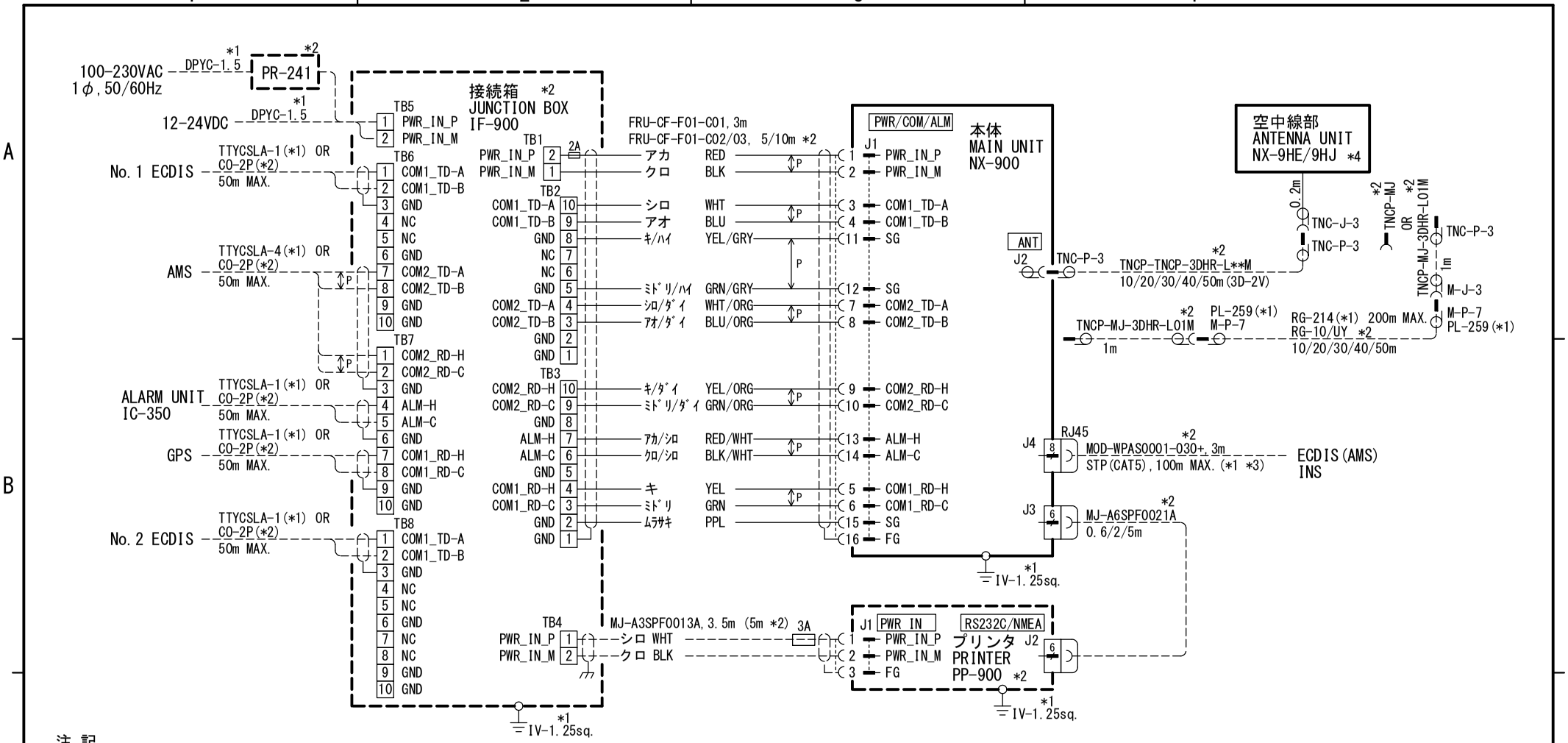

注 記

＊1）造船所手配。

＊2）オプション。

＊3）標準LANケーブル使用時コネクタパネルの防水は無効。

＊4）NX-9HE:国際用、NX-9HJ:日本語用。

NOTE

*1: SHIPYARD SUPPLY.

*2: OPTION.

*3: WATERPROOF AT CONNECTOR PANEL IS INVALID WHEN A STANDARD LAN CABLE IS USED.

*4: NX-9HE: FOR INTERNATIONAL NX-9HJ: FOR JAPAN.

CO-2P : CO-SPEVVSBC 2Px0.2LF, φ10.5

DRAWN 19/Nov/2024 T. YAMASAKI		TYPE	NX-900 (IF-900)
CHECKED 21/Nov/2024 A. Murao		名 称	ナブテックス受信機
APPROVED 21/Nov/2024 A. Murao			相互結線図
SCALE / MASS kg		NAME	NAVTEX RECEIVER
DWG. No. C5715-C02- F	REF. No. 08-025-1001-0		INTERCONNECTION DIAGRAM

FURUNO ELECTRIC CO., LTD.

INDEX

A

Abbreviations AP-14
Alerts 2-8
  Acknowledgment/resolution 2-9
  Alert mode 4-16
  Icons.....AP-13
  Indication 2-8
  List..... 2-8
  Priority AP-11

D

Default settings 3-5
Diagnostics menu..... 4-14
Digital interface AP-2
  Data transmission AP-3
  Load requirements AP-3
  Sentence data AP-2
  Sentence description.....AP-5
Display Menu 2-16

F

Frequency 2-12
  Local frequency 2-12
  Switching frequency 2-12
Fuse 3-2

G

Grounding 4-11

I

Initial settings 4-12
  Network 4-13

J

JIS cable guide.....AP-10

M

Maintenance..... 3-1
Menu tree AP-1
Message Settings..... 2-11
Messages..... 2-5
  Category..... 2-6
  Lock..... 2-6
  Printing 2-7
  Unlock 2-7
Mounting 4-1
  Antenna unit (NX-9HE) 4-5
  Junction Box (IF-900)..... 4-4
  Main unit..... 4-1

N

NAVTEX..... 1-1
NAVTEX Station List 1-4
  Add station 2-13
  Edit station 2-14
NAVTEX Station Map..... 1-3

P

Panel Dimmer 2-4
Parts location AP-16
Power On/Off 2-2
Printer setup..... 4-11

R

Receive Mode 2-10

S

Self test 3-3
Service menu 4-15
Status Bar 2-3
System Menu 2-15

T

Troubleshooting 3-2

W

Wiring 4-6
  Coaxial cable..... 4-10
  Junction Box (IF-900)..... 4-8
  Main unit..... 4-6

FURUNO ELECTRIC CO., LTD.
9-52 Ashihara-cho, Nishinomiya, 662-8580, Japan
Tel: +81 (0)798 65-2111 Fax: +81 (0)798 63-1020
www.furuno.com

Publication No. SOCQA0043

PSTI Statement of Compliance

We FURUNO ELECTRIC CO., LTD.

(Name of manufacturer of the product)

9-52 Ashihara-Cho, Nishinomiya City, 662-8580, Hyogo, Japan

(Address of manufacturer of the product)

declare under our sole responsibility that the product

NAVTEX RECEIVER
NX-900

(Product type, batch)

December / 31 / 2033

(Support period for the product)

https://www.furuno.co.jp/en/csr/sociality/customer/product_security.html

(Weblink for latest information and contact to report to the manufacturer security issues)

to which this declaration relates conforms to the following standard(s) or other normative document(s)

Product Security and Telecommunications Infrastructure Act 2022

Product Security and Telecommunications Infrastructure (Security Requirements for Relevant Connectable Products) Regulations 2023 Schedule 1

On behalf of Furuno Electric Co., Ltd.

Nishinomiya City, Japan
23 May 2024

(Place and date of issue)

Akihiko Kanechika
Department General Manager
Quality Assurance Department A. Kanechika

(Signature, name and function of the signatory)